Crydom

See full Datasheet below...

onlinecomponents.com
THE ONLINE DISTRIBUTOR OF ELECTRONIC COMPONENTS

BUY NOW

MASTER™ ELECTRONICS

BUY NOW

masterelectronics.com & onlinecomponents.com
are **authorized** e-commerce distributors
of electronic components.

HA / HD60 Series

- Ratings from 25A to 125A @ 48-660 VAC
- SCR output for heavy industrial loads
- Zero turn-on or instantaneous turn-on outputs
- UL/CSA/VDE Approved, CE Compliant to EN60950-1
- Improved SEMS screw and washer
- Redesigned housing with anti-rotation barriers
- AC or DC control
- Direct bond copper substrate
- EMC compliant to Level 3
- Direct power lead frame
- Epoxy free design

For **Generation 3** datasheet click here

PRODUCT SELECTION

Control Voltage	25A	50A	90A	125A
4-32 VDC	HD6025	HD6050	HD6090	HD60125
90-280 Vrms	HA6025	HA6050	HA6090	HA60125
18-36 Vrms	HA6025E	HA6050E	HA6090E	HA60125E

AVAILABLE OPTIONS

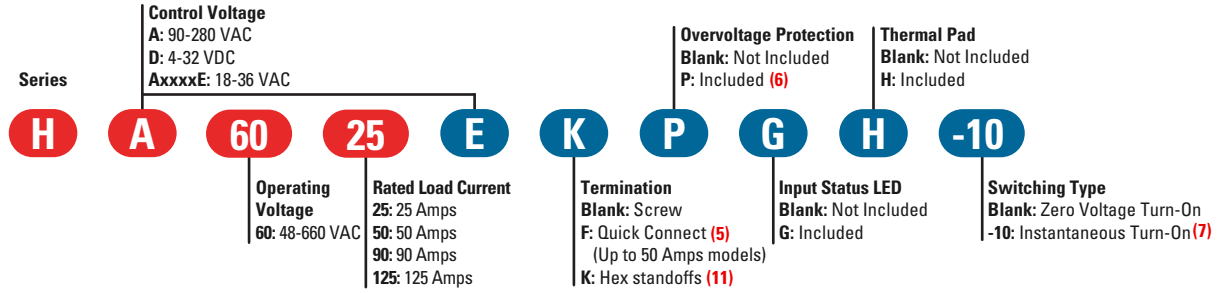

Required for valid part number
For options only and not required for valid part number
* Not all part number combinations are available. Contact Crydom Technical Support for informacion on the availability of a specific part number.

OUTPUT SPECIFICATIONS (1)

Descrption	25A	50A	90A	125A
Operating Voltage (47-440Hz) [Vrms]	48-660	48-660	48-660	48-660
Transient Overvoltage [Vpk]	1200	1200	1200	1200
Maximum Off-State Leakage Current @ Rated Voltage [mArms]	1.0	1.0	1.0	1.0
Minimum Off-State dv/dt @ Maximum Rated Voltage [V/µsec]	500	500	500	500
Maximum Load Current [Arms] (2)	25	50	90	125
Minimum Load Current [mArms]	150	150	150	150
Maximum 1 Cycle Surge Current (50/60Hz) [Apk]	235/250	597/625	1145/1200	1670/1750
Maximum On-State Voltage Drop @ Rated Current [Vrms]	1.15	1.15	1.15	1.15
Thermal Resistance Junction to Case (Rjc) [°C/W]	0.8	0.45	0.27	0.22
Maximum 1/2 Cycle I^2t for Fusing (50/60Hz) [A^2 sec]	285/259	1770/1629	6560/5976	13950/12709
Minimum Power Factor (at Maximum Load) (6)	0.5	0.5	0.5	0.5

Copyright © 2014 Crydom Inc. Specifications subject to change without notice.

INPUT SPECIFICATIONS (1)

Description	HD60xx	HA60xx	HA60xxE
Control Voltage Range	4-32 VDC	90-280 Vrms	18-36 Vrms
Minimum Turn-On Voltage	4.0 VDC (3)	90 Vrms	18 Vrms
Minimum Turn-Off Voltage	1.0 VDC	10 Vrms	4.0 Vrms
Maximum Reverse Voltage	-32 VDC	-	-
Minimum Input Current	7.0 mA	5 mA	16 mA
Maximum Input Current	12 mA	10 mA	20 mA
Nominal Input Impedance		Current Regulated	
Maximum Turn-On Time [msec]	1/2 Cycle (4)	20	20
Maximum Turn-Off Time [msec]	1/2 Cycle	30	30

GENERAL SPECIFICATIONS (1)

Description	Parameters
Dielectric Strength, Input/Output/Base (50/60Hz)	4000 Vrms
Minimum Insulation Resistance (@ 500 VDC)	10^9 Ohm
Maximum Capacitance, Input/Output	8 pF
Ambient Operating Temperature Range	-40 to 80 °C
Ambient Storage Temperature Range	-40 to 125 °C
Weight (typical)	2.6 oz (74.9 g)
Housing Material	UL94 V-0
Baseplate Material	Aluminum
Input Terminal Screw Torque Range (in-lbs/Nm)	13-15 /1.5-1.7
Load Terminal Screw Torque Range (in-lbs/Nm)	18-20 / 2.0-2.2
SSR Mounting Screw Torque Range (in-lbs/Nm)	18-20 / 2.0-2.2
Input/Load terminal Screw Torque Range (in-lbs/Nm) (11)	w/"K" option 8-10 / 0.9-1.13
Humidity	85% non-condensing
LED Input Status Indicator	w/"G" option (green)
MTBF (Mean Time Between Failures) at 40°C ambient temperature (12)	11,641,553 hours (1,328 years)
MTBF (Mean Time Between Failures) at 60°C ambient temperature (12)	7,210,376 hours (823 years)

WIRING DIAGRAM

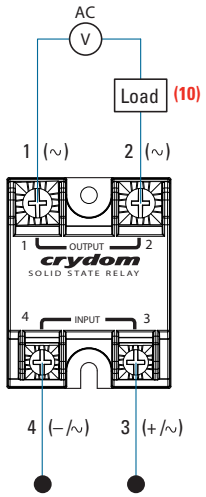

Recommended Wire Sizes

Terminals	Wire Size (Solid / Stranded)	Wire Pull-Out Strength (lbs)[N]
Input	24 AWG (0.2 mm²) / 0.2 [minimum]	10 [44.5]
	2 x 12 AWG (3.3 mm²) / 3.3 [maximum]	90 [400]
Output	20 AWG (0.5 mm²) / 0.518 [minimum]	30 [133]
	2 x 10 AWG (5.3 mm²) / 5.3	110 [490]
	2 x 8 AWG (8.4 mm²) / 8.4 [maximum]	90 [400]

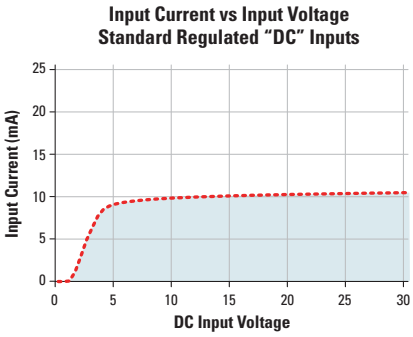

EQUIVALENT CIRCUIT BLOCK DIAGRAMS

Diagram: HD60xx

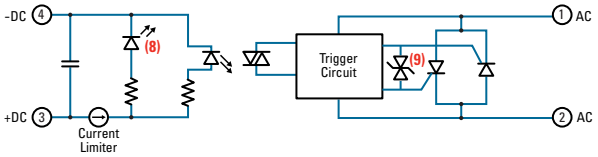

Diagram: HAxxxx

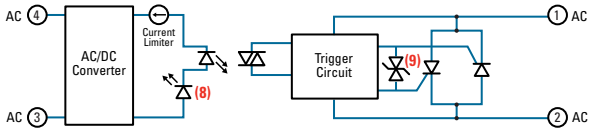

Copyright © 2014 Crydom Inc. Specifications subject to change without notice.

MECHANICAL SPECIFICATIONS (1)

Tolerances: ±0.02 in / 0.5 mm
All dimensions are in: inches [millimeters]

Screw Termination

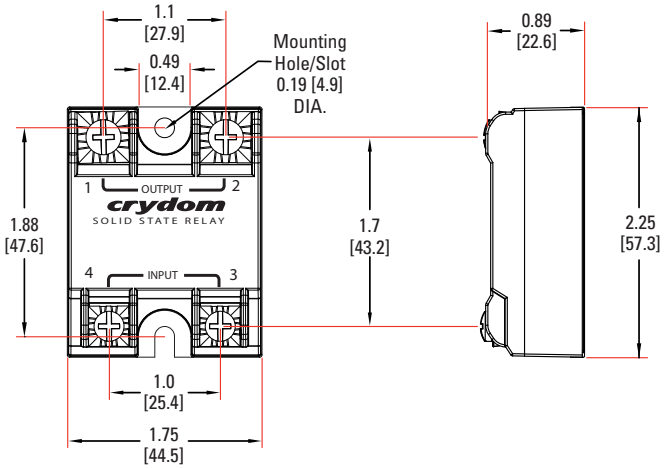

Hex Standoff Termination ("K" Option) (11)

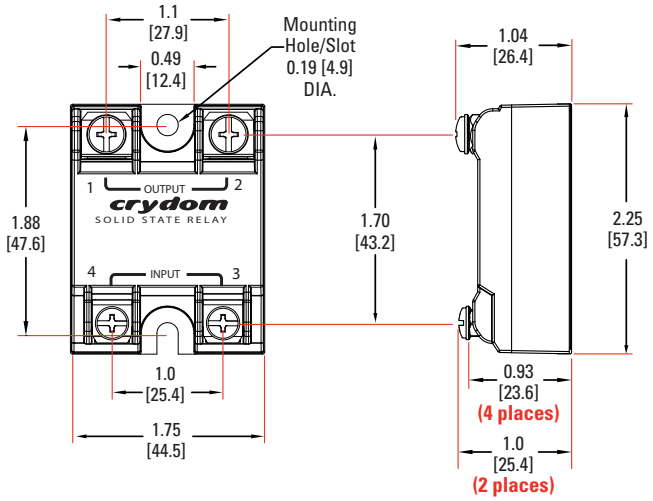

Quick Connect Termination ("F" Option) - Up to 25 Amp (5)

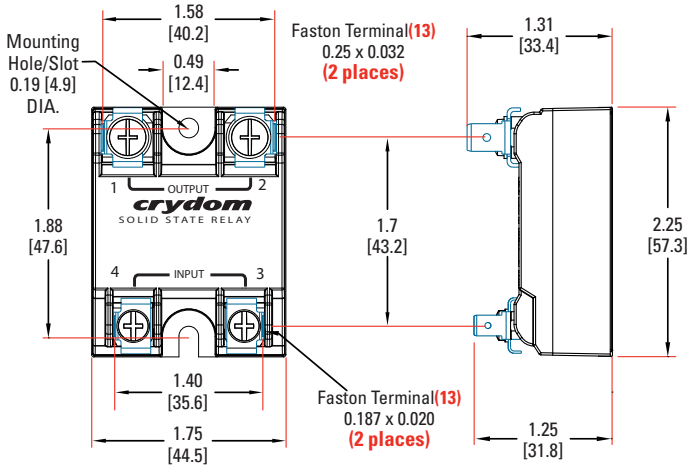

Quick Connect Termination ("F" Option) - Up to 50 Amp (5)

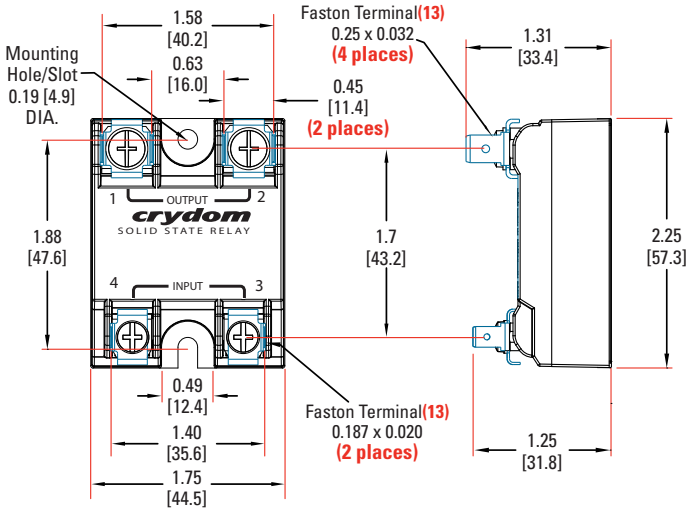

GENERAL NOTES

(1) All parameters at 25°C unless otherwise specified.
(2) Heat sinking required, see derating curves. For "K" option maximum current up to 50 Amp.
(3) Increase minimum voltage by 1V for operations from -20 to -40°C.
(4) Turn-on time for Instantaneous turn-on versions is 0.02 msec (DC Control Models).
(5) Single pair (up to 25A) Double pair* (50A model only). ***Caution:** User must connect to both pairs.
(6) Output will self trigger between 900-1200Vpk, Min. power factor 0.7 or higher, not suitable for capacitive loads.
(7) Instantaneous turn-on version is not recomended for capacitive loads. Use zero turn-on only.
(8) Elective Input Status LED, "G" option.
(9) Elective Overvoltage Protection, "P" option.
(10) Load can be wired to either SSR output terminal 1 or 2.
(11) Option "K" is intended only for use in attaching a printed circuit board to the SSR or mounting the SSR to a printed circuit board (PCB minimum thickness is 0.031 in)
(12) All parameters at 50% power rating and 100% duty cycle (contact Crydom tech support for detailed report).
(13) Mechanical dimensions vary from G3 models.

For additional information or specific questions, contact Crydom Technical Support.

Copyright © 2014 Crydom Inc. Specifications subject to change without notice.

SURGE CURRENT INFORMATION

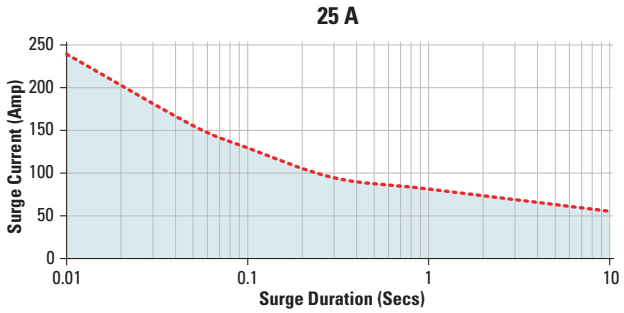

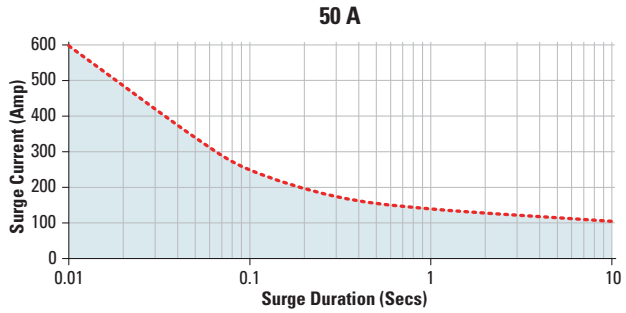

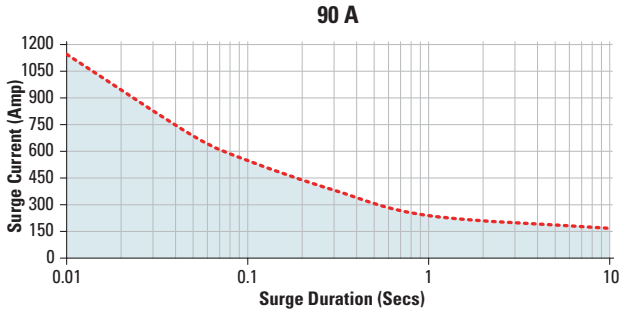

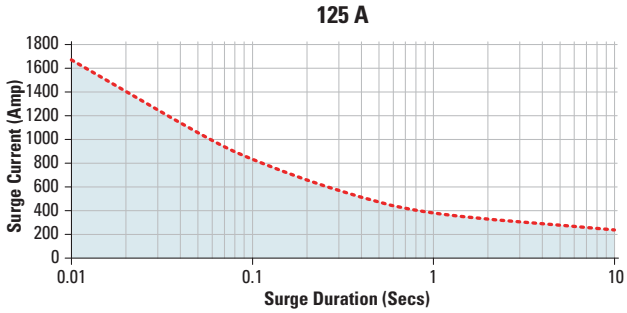

Non repetitive peak surge current at Tj initial 40°C.

THERMAL DERATE INFORMATION

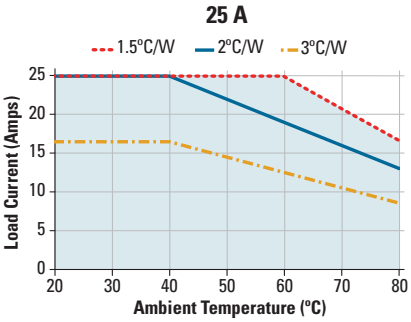

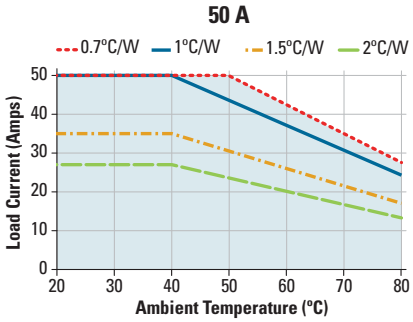

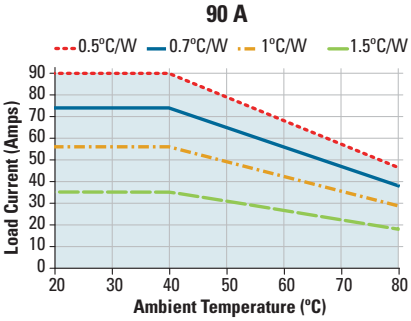

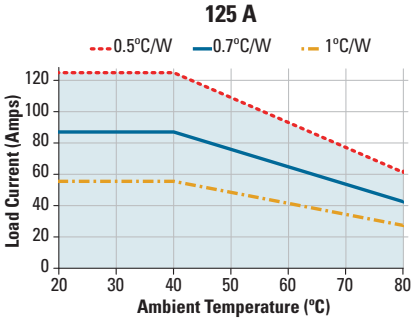

Copyright © 2014 Crydom Inc. Specifications subject to change without notice.

AGENCY APPROVALS

Designed in accordance with the requirements of IEC 62314
IEC 61000-4-2 : Electrostatic Discharge – Level 3
IEC 61000-4-4 : Electrically Fast Transients – Level 3
IEC 61000-4-5 : Electrical Surges – Level 3
IEC 600068-2-6: Vibration 0.33mm and 0.75mm Amplitude over 10-55 Hz
IEC 600068-2-27: Shock Resistance 15g/11ms

c UL us E116949 LR81689 VDE 10143 UG CE RoHS

PEP eco PASS PORT Series 1 has Environmental Product declarations type III conforming to ISO 14025.

ACCESORIES

New Accessories!
Protective Cover & Hardware Kits

Protective Cover
Part number: KS101

Clear plastic cover compatible with all new S1 designs. Safety covers provide added protection from electric shock when installing or checking equipment.

Hardware Kit
Part number: HK4

Bag with 2 square brass accessories and 2 screw 8-32 x 5/8 for output. Used to mount TMR1 lug terminals.

Recommended Accessories

Cover	Hardware Kit	Heat Sink Part No.	Thermal Resistance [°C/W]	Lug Terminal	Thermal Pad
KS101	HK1	HS501DR	5.0	TRM1	HSP-1
	HK4	HS301 / HS301DR	3.0	TRM6	HSP-2
		HS251	2.5		
		HS202 / HS202DR	2.0		
		HS201 / HS201DR	2.0		
		HS172	1.7		
		HS151 / HS151DR	1.5		
		HS122 / HS122DR	1.2		
		HS103 / HS103DR	1.0		
		HS101	1.0		
		HS073	0.7		
		HS072	0.7		
		HS053	0.5		
		HS033	0.36		
		HS023	0.25		

Rev. 112614

Copyright © 2014 Crydom Inc. Specifications subject to change without notice.

⚠ DANGER / PELIGRO / DANGER /GEFAHR / PERICOLO / 危险

HAZARD OF ELECTRIC SHOCK, EXPLOSION, OR ARC FLASH.

- Disconnect all power before installing or working with this equipment.
- Verify all connections and replace all covers before turning on power.

Failure to follow these instructions will result in death or serious injury.

RIESGO DE DESCARGA ELECTRICA O EXPLOSION.

- Desconectar todos los suministros de energia a este equipo antes de trabajar con este equipo.
- Verificar todas las conexiones y colocar todas las tapas antes de energizer el equipo.

El incumplimiento de estas instrucciones puede provocar la muerte o lesiones serias.

RISQUE DE DESCHARGE ELECTRIQUE OU EXPLOSION

- Eteindre toutes les sources d'énergie de cet appareil avant de travailler dessus de cet appareil
- Vérifier tous connections, et remettre tous couverts en olace avant de mettre sous

De non-suivi de ces instructions provoquera la mort ou des lésions sérieuses sérieuses.

GEFAHR EINES ELEKTRISCHE N SCHLAGES ODER EINER EXPLOSION.

- Stellen Sie jeglichen Strom ab, der dieses Gerät versorgt, bevor Sie an dem Gerät Arbeiten durchführen
- Vor dem Drehen auf Energie alle Anschlüsse überprüfen und alle Abdeckungen ersetzen.

Unterlassung dieser Anweisungen können zum Tode oder zu schweren Verletzungen führen.

RISCHIO DI SCOSSA ELETTRICA O DELL'ESPLOSI ONE.

- Spenga tutta l'alimentazion e che fornisce questa apparecchiatu ra prima del lavorare a questa apparecchiatu ra
- Verificare tutti i collegamenti e sostituire tutte le coperture prima della rotazione sull'alimentazi one

L'omissione di seguire queste istruz ioni provocherà la morte o di lesioni serie

存在电击、爆炸或电弧闪烁危险

- 在操作此设备之前请先关闭电源。

若不遵守这些说明，可能会导致严重的人身伤害甚至死亡。

⚠ WARNING / AVERTISSEMENT / WARNUNG /ADVERTENCIA / AVVERTENZA / 警告

RISK OF MATERIAL DAMAGE AND HOT ENCLOSURE

- The product's side panels may be hot, allow the product to cool before touching.
- Follow proper mounting instructions including torque values.
- Do not allow liquids or foreign objects to enter this product.

Failure to follow these instructions can result in serious injury, or equipment damage.

RISQUE DE DOMMAGE MATERIEL ET DE SURCHAUFFE DU BOITIER

- Les panneaux latéraux du produit peuvent être chauds. Laisser le produit refroidir avant de le toucher.
- Respecter les consignes de montage, et notamment les couples de serrage.
- Ne pas laisser pénétrer de liquide ni de corps étrangers à l'intérieur du produit.

Le non-respect de cette directive peut entraîner, des lésions corporelles graves ou des dommages matériels.

GEFAHR VON MATERIALSCHÄDEN UND GEHÄUSEERHITZUNG

- Die Seitenwände können heiß sein. Lassen Sie das Produkt abkühlen, bevor Sie es berühren.
- Beachten Sie die Montageanweisungen,
- Führen Sie keine Flüssigkeiten oder Fremdkörper in das Produkt ein.

Die Nichtbeachtung dieser Anweisung kann Körperverletzung oder Materialschäden zur Folge haben.

RIESGO DE DAÑOS MATERIALES Y DE SOBRECALENTAMIENTO DE LA UNIDAD

- Los paneles laterales del producto pueden estar calientes. Esperar que el producto se enfríe antes de tocarlo.
- Respetar las instrucciones de montaje, y en particular los pares de apretado.
- No dejar que penetren líquidos o cuerpos extraños en el producto.

Si no se respetan estas precauciones pueden producirse graves lesiones, daños materiales.

RISCHIO DI DANNI MATERIALI E D'INVOLUCRO CALDO

- I pannelli laterali dell'apparecchio possono scottare; lasciar quindi raffreddare il prodotto prima di toccarlo.
- Seguire le istruzioni di montaggio corrette.
- Non far entrare liquidi o oggetti estranei in questo apparecchio.

La mancata osservanza di questa precauzione può causare gravi rischi per l'incolumità personale o danni alle apparecchiature.

材料损坏和高温外壳的危险性

- 产品的一侧面板可能很热，在其冷却前请不要触碰。
- 遵照正确的安装说明，包括扭矩值。
- 请勿让液体及其他异物进入本产品。

如不能正确执行这些操作说明，极有可能造成严重人体伤害或者设备的损坏。

Copyright © 2014 Crydom Inc. Specifications subject to change without notice.

ANNEX - ENVIROMENTAL INFORMATION

The environmental information disclosed in this annex including the EIP Pollution logo are in compliance with People's Republic of China Electronic Industry Standard SJ/T11364 – 2006, Marking for Control of Pollution Caused by Electronic Information Products.

Part Name	Toxic or hazardous Substance and Elements					
	Lead (Pb)	Mercury (Hg)	Cadmium (Cd)	Hexavalent Chromium (Cr (VI))	Polybrominated biphenyls (PBB)	Polybrominated diphenyl ethers (PBDE)
Semiconductor die	X	O	O	O	O	O
Solder	X	O	O	O	O	O

附件 - 环保信息

此附件所标示的包括电子信息产品污染图标的环保信息符合中华人民共和国电子行业标准 SJ/T11364 - 2006, 电子信息产品污染控制标识要求。

部件名称	有毒有害物质或元素					
	铅 (Pb)	汞 (Hg)	镉 (Cd)	六价铬 (Cr (VI))	多溴联苯 (PBB)	多溴二苯醚 (PBDE)
半导体芯片	X	O	O	O	O	O
焊接点	X	O	O	O	O	O

Copyright © 2014 Crydom Inc. Specifications subject to change without notice.