SHEET 1 OF 1

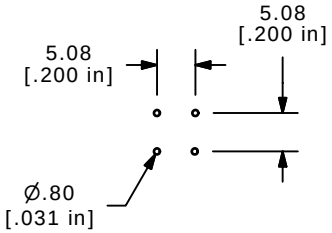

PC MOUNTING

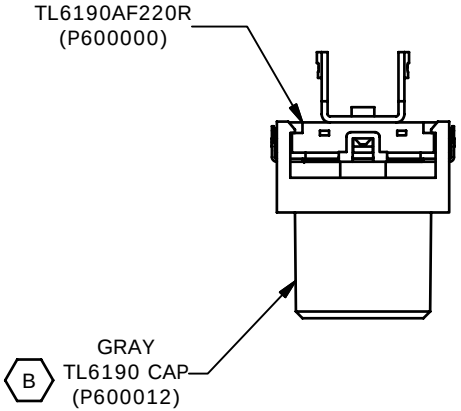

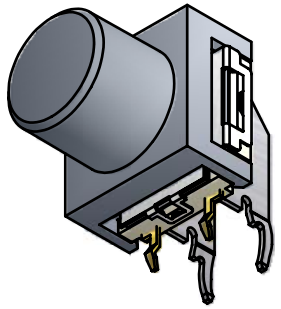

SPST N.O.
CIRCUIT

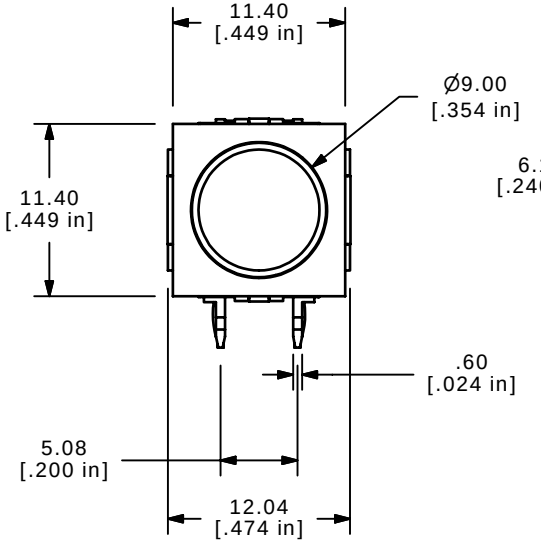

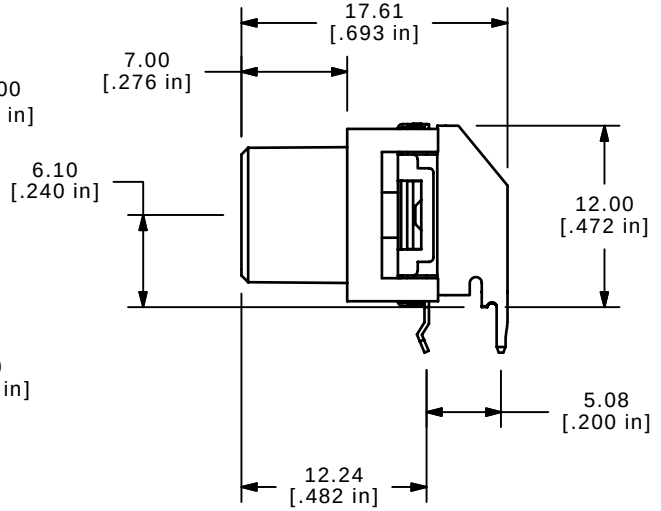

NOTES:
1. ALL DIMENSIONS IN MM [IN].
2. GENERAL TOLERANCE: X.X=±0.4
   X.XX=±0.25
3. TERM. NOS. FOR REFERENCE ONLY.
4. RATING: 12V, 50mA MAX; 100mV, 10mA MIN
▲5. OPERATING FORCE: 220±60 GRAMS
6. TRAVEL: 0.50±0.20mm
7. CONTACT RESISTANCE: 100 MILLI-OHMS MAX (INITIAL)
8. MECHANICAL/ELECTRICAL LIFE: 100,000 CYCLES MIN
▲9. CONTACTS: GOLD, 10 MICRO INCHES MIN
10. ▲ DENOTES CRITICAL PARAMETER.
▲11. SWITCH TO BE SEALED PER E-SWITCH BUBBLE TEST.
12. OPERATING TEMPERATURE:
    SWITCH: -40C TO +105C
    CAP: -40C TO +85C
13. PACKAGING:
    SWITCH: 40 PIECES PER TUBE
    CAP: BULK

REV	PCR NO	DESCRIPTION	DATE	BY
B	18835	CAP NUMBER WAS P600010	2/4/10	BLR
A	16145	RELEASE TO PRODUCTION	6/15/06	BK

THE INFORMATION CONTAINED IN THIS DOCUMENT IS PROPRIETARY TO E-SWITCH AND IS NOT TO BE COPIED OR TRANSFERRED

E-SWITCH | LAMB INDUSTRIES

TITLE TL6190AF220RGRY (B)

SCALE	DATE	DR	DWG	REV
2=1	2/4/2010	BLR	XP0289A	B