TERMSERIES
TOS 120VUC 24VDC2A

Weidmüller Interface GmbH & Co. KG
Klingenbergstraße 16
D-32758 Detmold
Germany
Fon: +49 5231 14-0
Fax: +49 5231 14-292083
www.weidmueller.com

TERMSERIES complete solid-state relay modules 3 to 33 V DC 2 A output versions consisting of
a solid-state relay and a base with AC/DC/UC input;
available in different designs:

- With screw connection
- In 6.4 mm width
- Optionally with multiple-voltage input: 24 to 230 V UC
- With various protective circuits
  in the input (free-wheel diode, RC element)
- Illuminated ejection lever

General ordering data

Order No.	1127210000
Type	TOS 120VUC 24VDC2A
Version	TERMSERIES, Solid-state relay, Rated control voltage: 120 V UC ±10 % , Rated switching voltage: 3...33 V DC, Rated switching current: 2 A, Screw connection
GTIN (EAN)	4032248909315
Qty.	10 pc(s).

Creation date July 15, 2013 8:58:33 AM CEST

TERMSERIES
TOS 120VUC 24VDC2A

Weidmüller Interface GmbH & Co. KG
Klingenbergstraße 16
D-32758 Detmold
Germany
Fon: +49 5231 14-0
Fax: +49 5231 14-292083
www.weidmueller.com

Technical data

Dimensions and weights

Width	6.4 mm	Height	90 mm
Depth	88 mm	Weight	32.4 g
Net weight	32.4 g		

Temperatures

Humidity	5–95% rel. humidity, T_u = 40°C, no condensation	Operating temperature	-20 °C...+60 °C
Storage temperature	-40 °C...+70 °C		

Probability of failure

MTTF	1,319 Years

control side

Rated control voltage	120 V UC ±10 %	Nominal control current	5 mA AC (±30 %), 3 mA DC (±30 %)
Power rating	0.48 VA	Input frequency	3 Hz
Cut-in (switch-on) voltage	≥ 65 V AC, ≥ 63 V DC	Dropout voltage	≤ 78 V AC, ≤ 89 V DC
Protective circuit, control side	Rectifier	Status display on control side	Green LED

Load side

Solid-state type	MOS-FET	Rated switching voltage	3...33 V DC
Continuous current	2 A	Rated switching current	2 A
Switch-on delay	< 6.5 ms	Switch-off delay	< 10 ms
Leakage current	< 10 µA	Protective circuit, load side	Integrated free-wheel diode
Voltage drop at max. load	≤ 120 mV	Short-circuit-proof	No

General data

Solid-state type	MOS-FET	No. of poles	1
Wire connection method	Screw connection	Humidity	5–95% rel. humidity, T_u = 40°C, no condensation
Standards	DIN EN 50178		

Insulation coordination

Rated voltage	300 V	Clearance and creepage distances for control side - load side	≥ 5.5 mm
Dielectric strength to mounting rail	4 kV_{eff} / 1 min.	Impulse withstand voltage	6 kV (1.2/50 µs)
Pollution severity	2	Surge voltage category	III

Further details of approvals

Standards	DIN EN 50178

Connection data

Clamping range, rated connection	1.5 mm²	Clamping range, rated connection, max.	1.5 mm²
Clamping range, rated connection, min.	0.14 mm²	Stripping length, rated connection	8 mm
Wire connection method	Screw connection		

TERMSERIES
TOS 120VUC 24VDC2A

Weidmüller Interface GmbH & Co. KG
Klingenbergstraße 16
D-32758 Detmold
Germany
Fon: +49 5231 14-0
Fax: +49 5231 14-292083
www.weidmueller.com

Technical data

Classifications

eClass 6.2	27-27-09-90	eClass 7.1	27-27-09-90

Approvals

Approvals

Downloads

Declaration of Conformity	K438_10_12.pdf
PDF	Operating Instructions
3-D model	

TERMSERIES
TOS 120VUC 24VDC2A

Weidmüller Interface GmbH & Co. KG
Klingenbergstraße 16
D-32758 Detmold
Germany
Fon: +49 5231 14-0
Fax: +49 5231 14-292083
www.weidmueller.com

Drawings
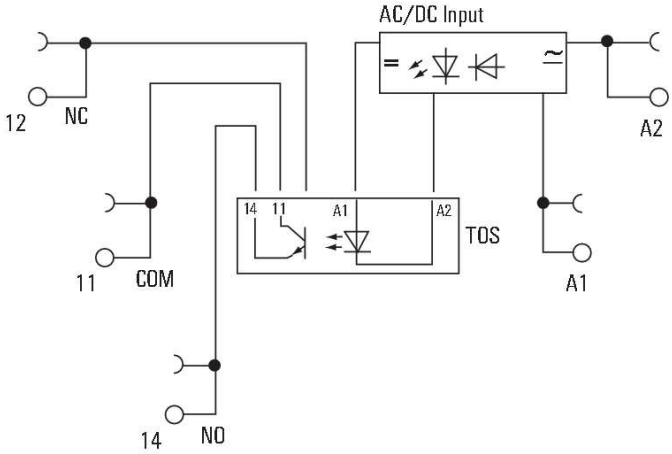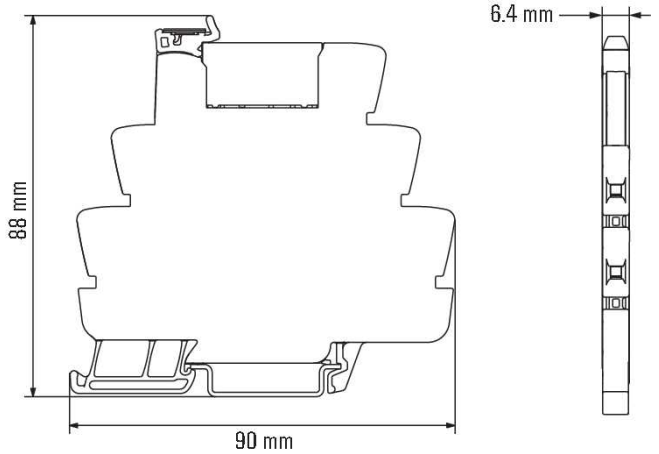
Circuit diagram