THIS DRAWING IS UNPUBLISHED. RELEASED FOR PUBLICATION –,– .
© COPYRIGHT – By – ALL RIGHTS RESERVED.

REVISIONS

P	LTR	DESCRIPTION	DATE	DWN	APVD
	A	NEW DRAWING	30NOV2016	RS	TD

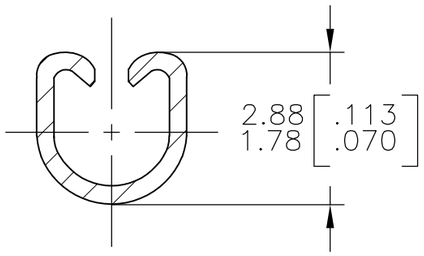

SECTION A–A

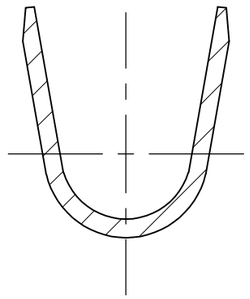

SECTION B–B

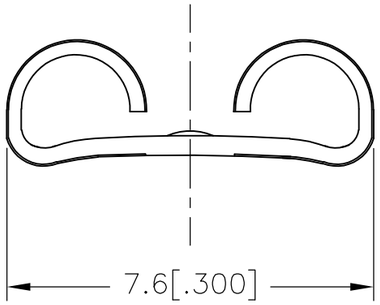

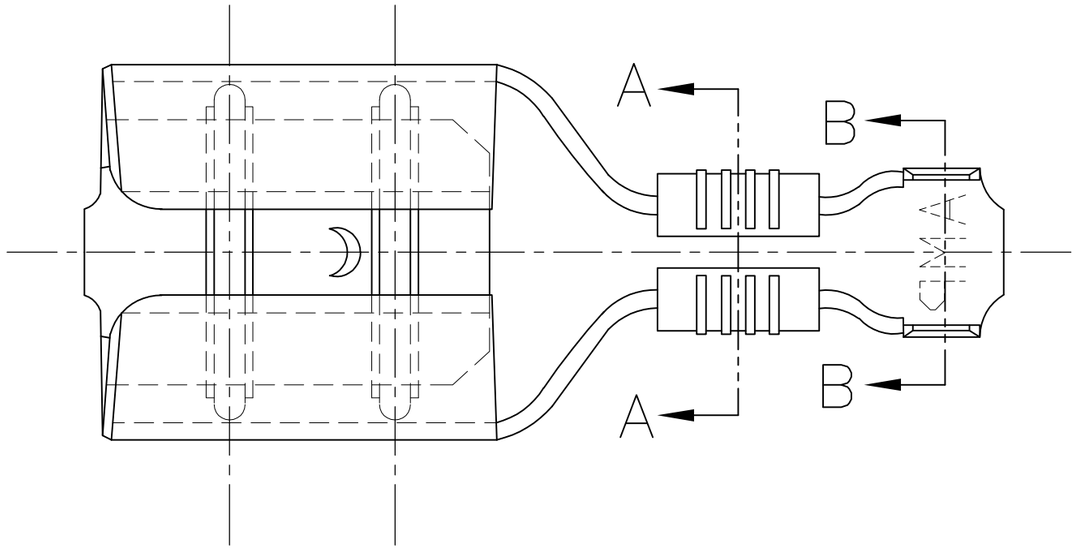

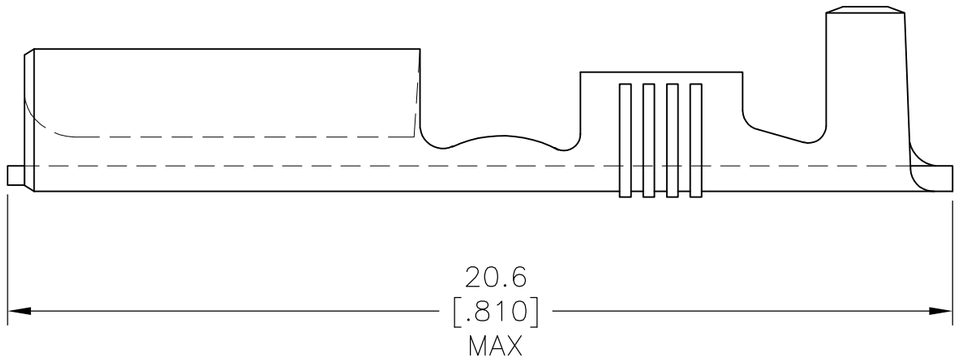

△1 SUPERSEDED PART.

140760–3	A–2	140794–3
140760–2	A–1	140794–2
△1 140760–1	A	~~140794–1~~
STRIP FROM	MAT.	PART NUMBER

STOCK THK.
0.40[.016]

CODE	MATERIAL DESCRIPTION
A	PHOSPHOR BRONZE

CODE	HEATTREATMENT
1	ELECTRO–TIN
2	SILVER PLATED

THIS DRAWING IS A CONTROLLED DOCUMENT.

DIMENSIONS: mm [INCHES]

TOLERANCES UNLESS OTHERWISE SPECIFIED:

0 PLC	± –
1 PLC	± 0.40[.015]
2 PLC	± 0.40[.015]
3 PLC	± 0.40[.015]
4 PLC	± –
ANGLES	± –

MATERIAL: SEE TABLE

FINISH: SEE TABLE

DWN RAVI S 30NOV2016
CHK LI DAISY 30NOV2016
APVD DING TIM 30NOV2016
PRODUCT SPEC —
APPLICATION SPEC —
WEIGHT —

TE Connectivity

NAME: FASTON RECEPTACLE

SIZE	CAGE CODE	DRAWING NO	RESTRICTED TO
A3	00779	C–140794	—

CUSTOMER DRAWING | SCALE 1:1 | SHEET 1 OF 1 | REV A

1470–19 (1/15)