DETAIL 'B'
SCALE 5:1

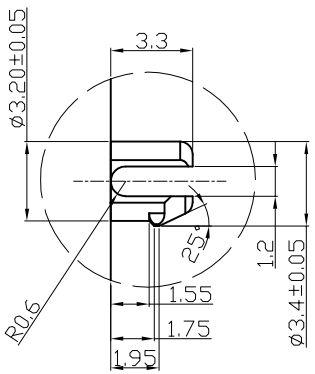

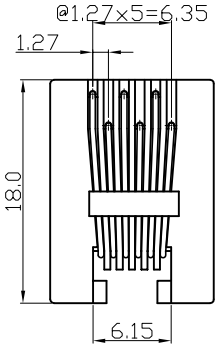

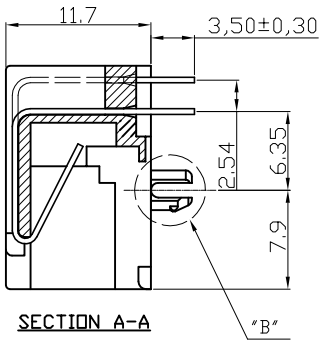

SECTION A-A

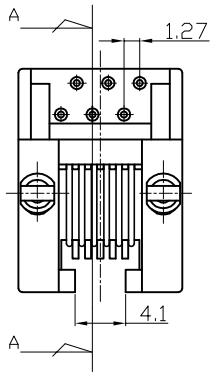

NOTES:
ELECTRICAL:
1. VOLTAGE RATING : 125 VAC .
2. CURRENT RATING : 1.5 AMP.
3. CONTACT RESISTANCE : 30 MILLIOHMS MAX.
4. INSULATION RESISTANCE: 1000 MEGOHMS MIN. @ 1000 VDC.
5. DIELECTRIC STRENGTH: 1000 VAC 60Hz, 1MIN.

MECHANICAL:
1. HOUSING MATERIAL : HIGH TEMP. UL94V-0.
2. CONTACT MATERIAL : PHOSPHOR BRONZE ø0.46mm.
③ 3. PLATING : 6u' GOLD on contact area
100~200u' Tin on solder area
all OVER 30~50u' NICKEL.
4. OPERATING LIFE : 750 CYCLES MIN.
5. PCB RETENTION PRE-SOLDER: 1 LB MIN.
6. PCB RETENTION POST-SOLDER: 10 LBS MIN.

ENVIRONMENTAL:
1. STORAGE : -40°C TO +85°C.
2. OPERATION: -40°C TO +85°C.

MATES WITH MODULAR PLUG CONFORMING TO
FCC PART 68, SUBPART F.

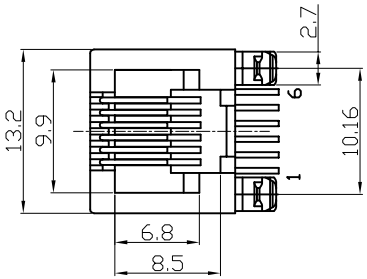

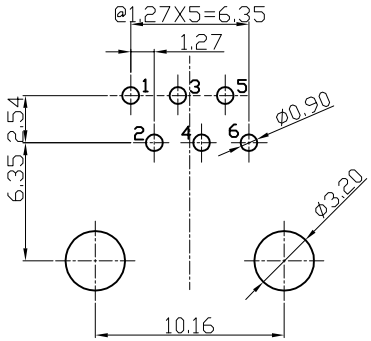

PC Board Layout
Component Side Shown

RoHS compliant
Unit: mm

Scale	Free
TOLERANCE	
.X	±0.20
.XX	±0.15
.XXX	±0.10
DIM	TOL
Angle	±5°

Id.	Modification	Date	Name
③	Update the contact plating	25.08.2015	Amy
②	Update	02.07.2009	Dean
①	Drawn	25.09.2008	N.Schulz

	Date	Name
Drawn	25.09.2008	N.Schulz
Approved	25.08.2015	Amy

ASSMANN wsw components

Customer-No.

ASSMANN WSW-No. A-20041/LP

Drawing-No. ASS 2802 CO rev03

Replace SHEET