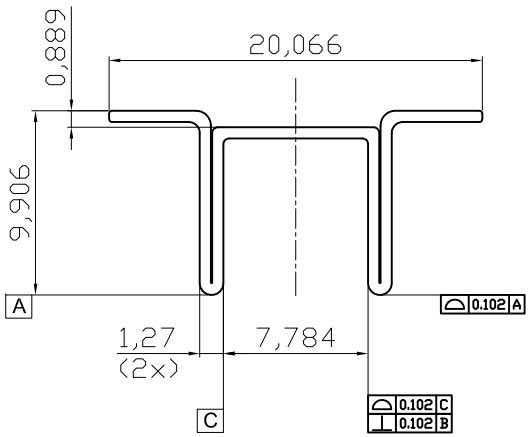

⑥ Recomended PCB solder layout footprint
all dimenion in mm

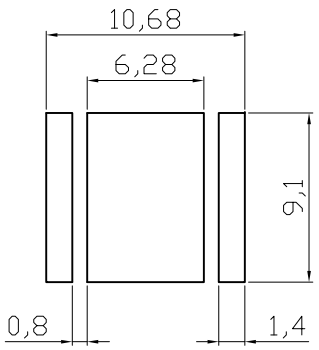

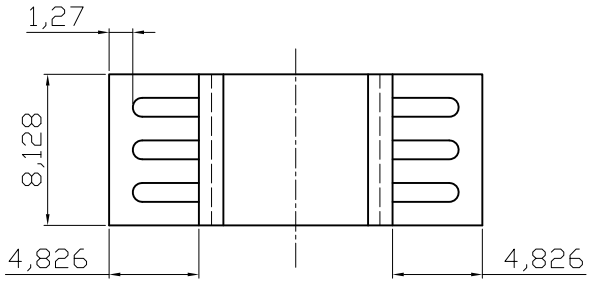

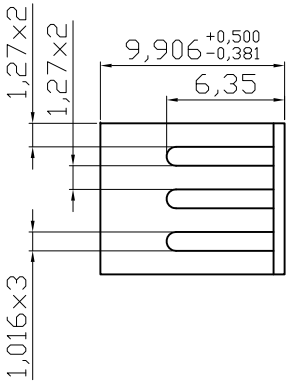

Material :Copper T=0.6mm
Finished: Bright Tin Plated
Unmarked round angleR is 0.75

Option	Packaging	Thermal resistance(K/W)
V-1100-SMD/B	⑤ Tape&Reel ③ 400 pcs/reel	25
V-1100-SMD/B-L	Bulk ⑤ 500 pcs/pe bag	25

RoHS compliant
Unit: mm

Scale	Free
TOLERANCE	
UNIT	±0.3
DIM	TOL
X.°	±X°
X.X°	±X°
Angle	TOL

Id.	Modification	Date	Name		Date	Name
⑥	Add PCB layout	14.10.2014	Amy			
⑤	Change the packing qty	10.01.2014	Amy	Drawn	11.08.2009	Dean
④	Change production plant	26.09.2013	Amy	Approved	14.10.2014	Amy
③	Update	13.06.2013	Amy			
②	Modify drawing layout	10.03.2010	Alex			
①	Drawn	11.08.2009	Dean			

ASSMANN WSW components

Customer-No.

ASSMANN WSW-No.
V-1100-SMD/Bx

Drawing-No.
ASS 0855 HS

rev06

Replace

Sheet