REV	ECN NO	REVISIONS	DRN	CKD	APP	DATE
A	——	NEW RELEASE	AJF	KLJ	NO	12-7-10

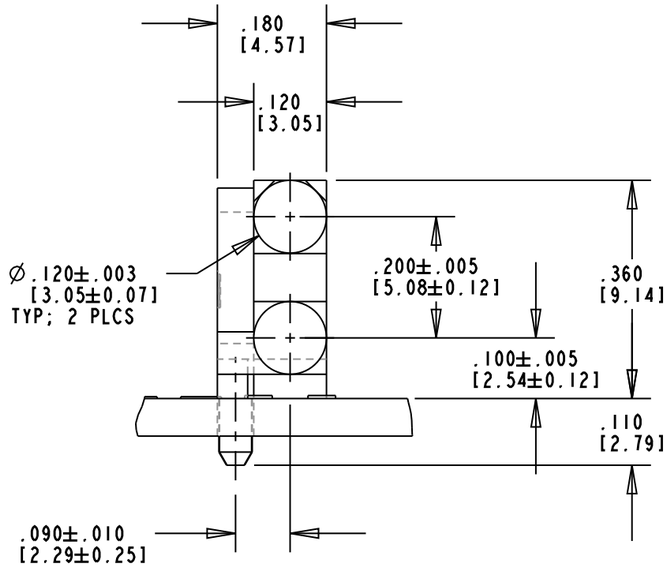

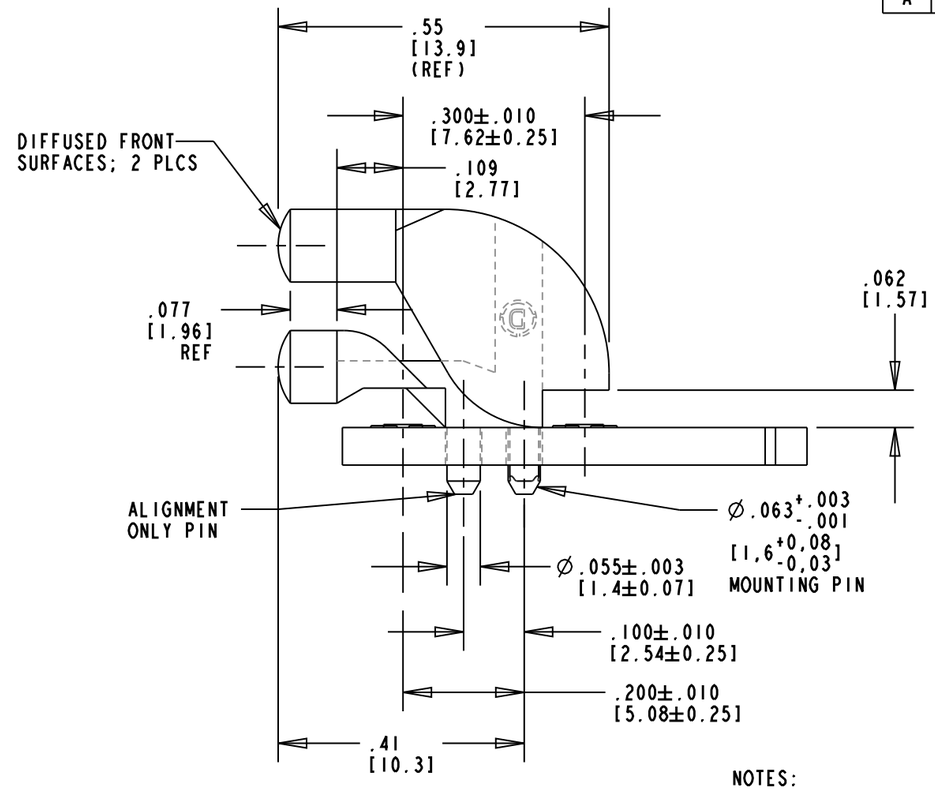

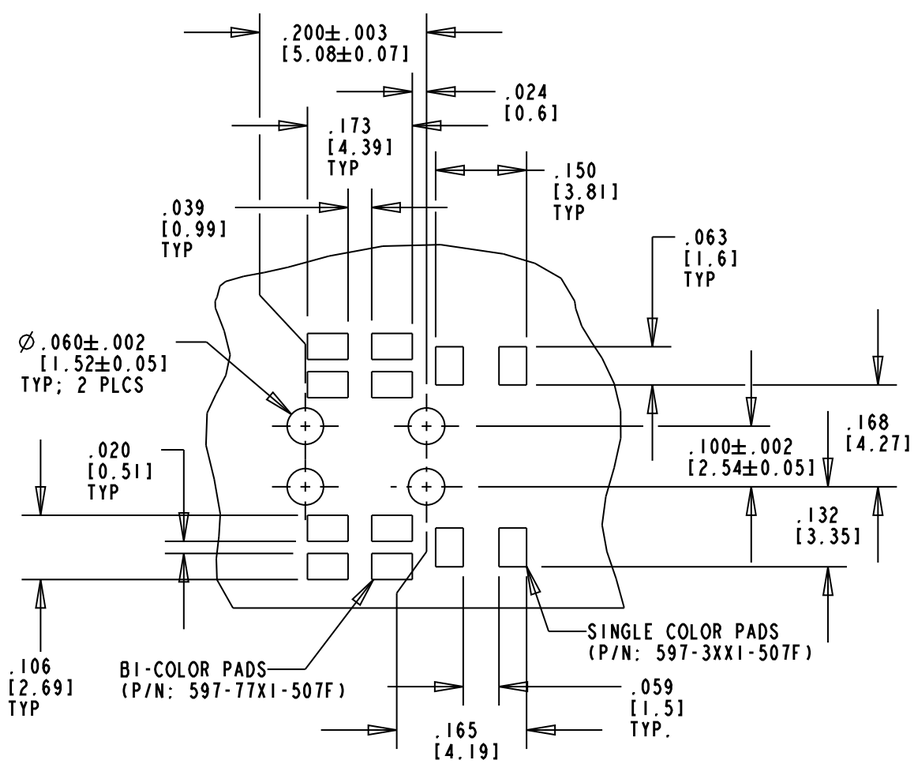

SOLDER PAD/HOLES LAYOUT

TOLERANCES: ±.002"

NOTES:

1. COMPONENTS TO BE MOLDED IN A CLEAR TRANSMISSIVE POLYCARBONATE (UL 94V-0 FLAMMABILITY).
2. MINIMUM ALLOWABLE PITCH IS .200 FOR EITHER BI-COLOR OR SINGLE.
3. COMPONENTS DESIGNED TO BE PRESSED INTO P.C. BOARD.
4. OPERATING/STORAGE TEMPERATURE: -30°C TO +100°C
5. RECOMMENDED LIGHT SOURCES: SINGLE OR BI-COLOR SMT LEDS (DIALIGHT P/N'S: 597-3XX1-50XF, 597-77X1-50XF)
6. DIALIGHT PART NUMBER: 515-1061-802F
7. PARTS TO BE MADE USING DIALIGHT MOLD A-296 ONLY.
8. PARTS TO BE PACKAGED IN CLEAR PLASTIC BAGS MARKED WITH DIALIGHT LOGO, P/N, QTY. PER BAG, DATE CODE, COUNTRY OF ORIGIN AND "FROM MOLD A-296".

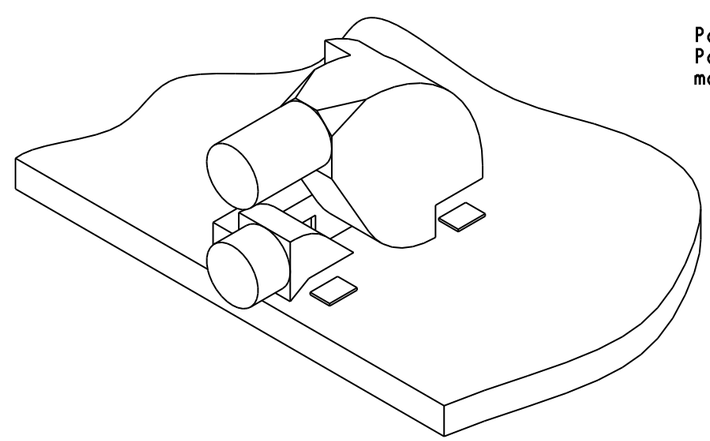

RoHS COMPLIANT 515-1061-802F

Part Numbers with the "F" suffix ending are RoHS Compliant. Packaging is marked with "RoHS Compliant" label or equivalent markings.

THIS DRAWING AND THE CONTENTS HEREIN ARE CONFIDENTIAL AND THE SOLE PROPERTY OF DIALIGHT. REPRODUCTION OF THIS DRAWING OR CONSTRUCTION OF ANY PARTS WITHIN THIS DRAWING ARE FORBIDDEN WITHOUT THE WRITTEN CONSENT OF DIALIGHT.

SCALE: DRAWING SCALE

ALL DIM'S IN: INCHES (MM)

TOLERANCES: UNLESS OTHERWISE SPECIFIED

FRACTIONS: ±1/64
DECIMALS (.XX): ±.02
DECIMALS (.XXX): ±.015

ANGLES: ±3°

FINISH:

FSCM 83330

DRAWING NUMBER: C-17894

REV: A

TITLE: BI-LEVEL LIGHT PIPE 2 CAVITY MOLD A-296

MATERIAL

Dialight

1501 ROUTE 34 SOUTH
FARMINGDALE, NJ 07727

SHEET 1 OF 1

FAMILY TABLE: