REV	ECN NO	REVISIONS	DRN	CKD	APP	DATE
A	102535	NEW RELEASE	LD	CS	NO	2-27-23

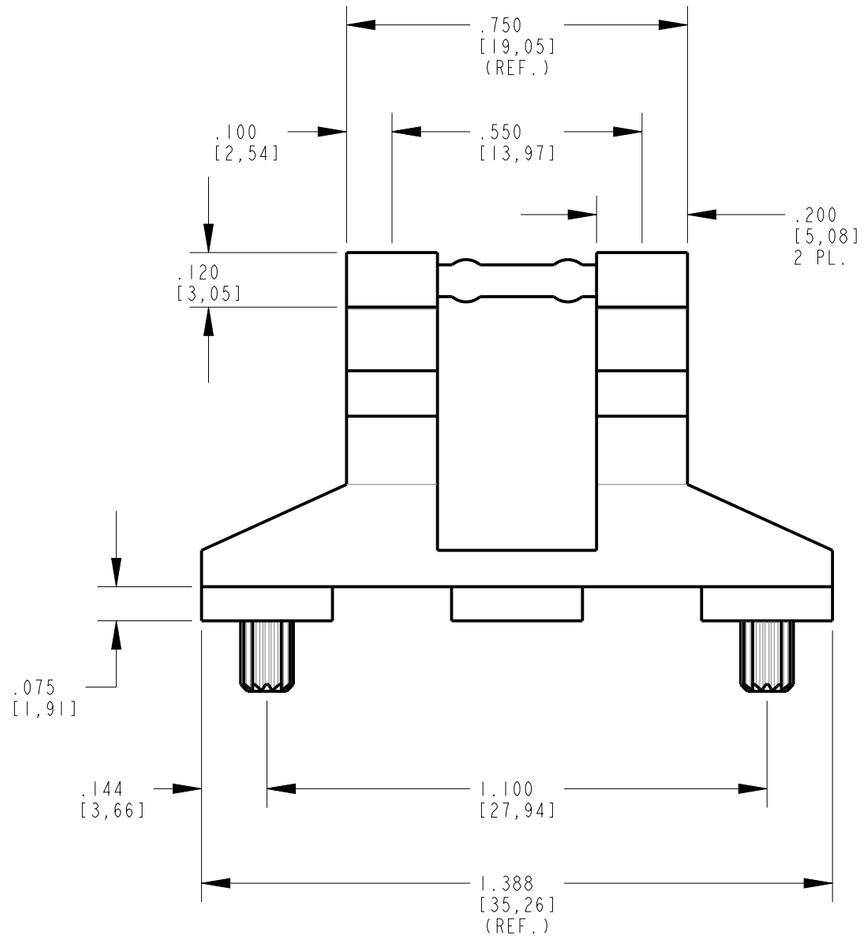

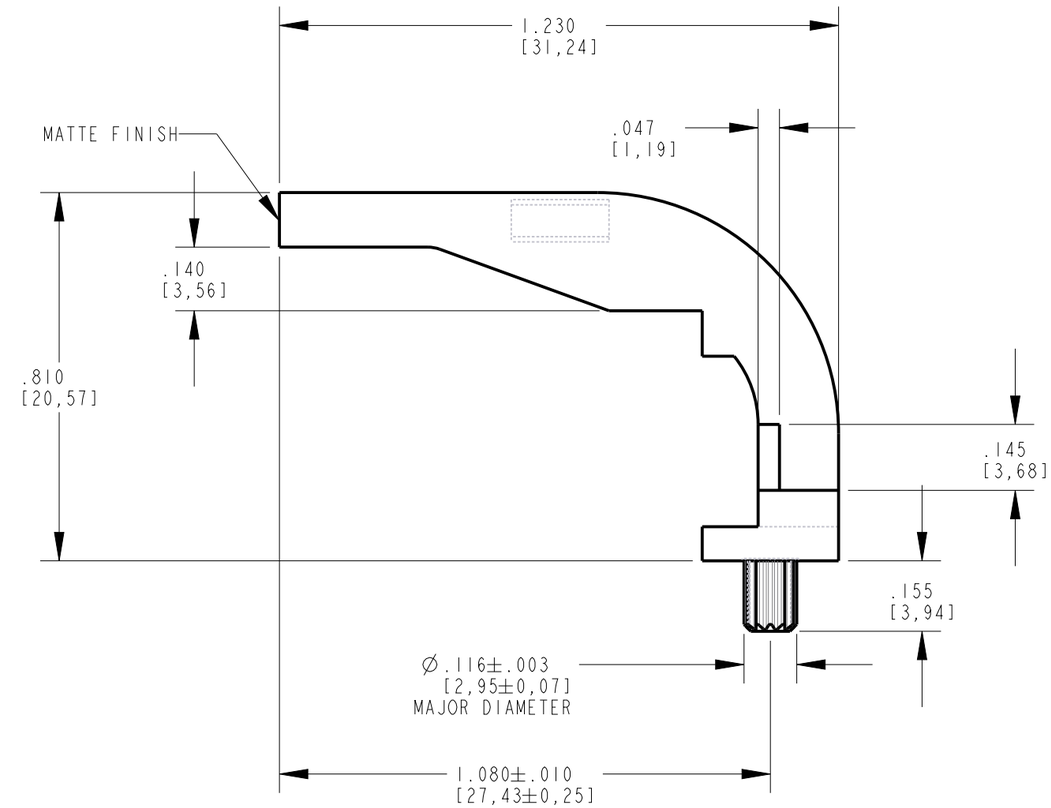

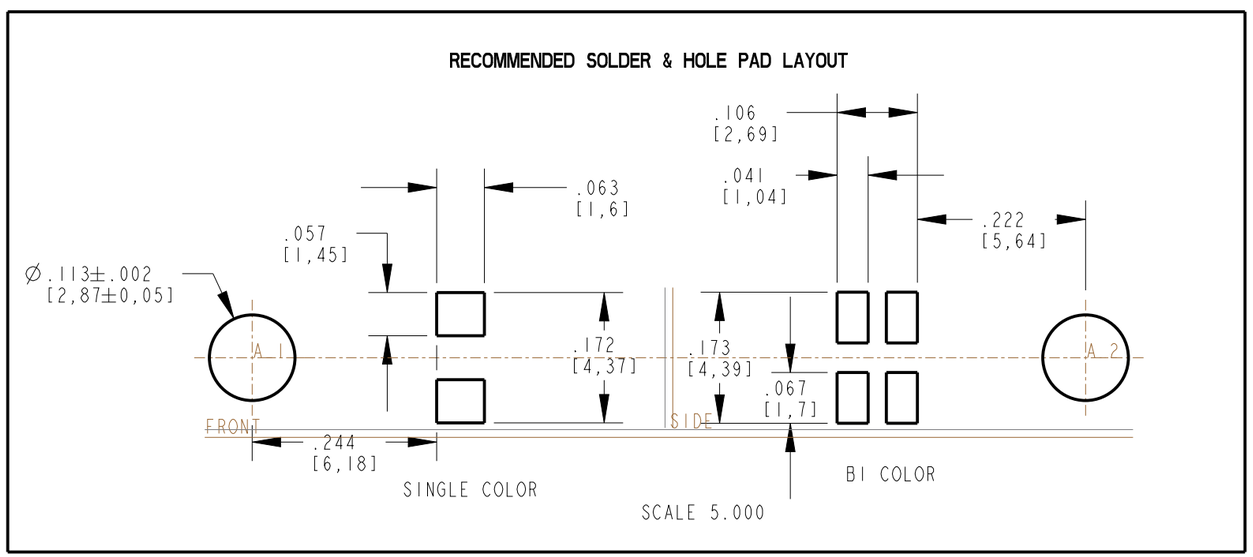

NOTES:
1. DIALIGHT PART NUMBER 515-1070F
2. MATERIAL TO BE CLEAR, TRANSMISSABLE POLYCARBONATE (UL 94V-0 FLAMABILITY).
3. COMPONENTS DESIGNED TO BE PRESSED INTO PC BOARD.
4. STORAGE AND OPERATING TEMPERATURE: -30 C TO +100 C.
5. RECOMMENDED SURFACE MOUNT DIALIGHT LEDS:
   597-3XX1-50XF (SINGLE COLOR)
   597-7XX1-50XF (BI COLOR)

THIS DRAWING AND THE CONTENTS HEREIN ARE CONFIDENTIAL AND THE SOLE PROPERTY OF DIALIGHT CORP. REPRODUCTION OF THIS DRAWING OR CONSTRUCTION OF ANY PARTS WITHIN THIS DRAWING ARE FORBIDDEN WITHOUT THE WRITTEN CONSENT OF DIALIGHT CORP.

DIALIGHT CORP INTERNAL REFERENCE ONLY : 3D MODEL : 5151070_BANDIX-A.2

SCALE: 3.000

ALL DIM's: INCH (mm)

TOLERANCES:
UNLESS OTHERWISE SPECIFIED
FRACTIONS: ±1/64
DECIMALS (.XX): ±.01
DECIMALS (.XXX): ±.005
DECIMALS (.XXXX): ±.0005
ANGLES: ±1°

FINISH

FSCM 83330

DRAWING NUMBER: C-18658

REV: A

TITLE: 2 ELEMENT LIGHTPIPE

MATERIAL

Dialight
1501 ROUTE 34 SOUTH
FARMINGDALE, NJ 07727
(732) 919-3119
www.dialight.com

SHEET 1 OF 1

FAMILY TABLE: