REV	ECN NO	REVISIONS	DRN	CKD	APP	DATE
A	———	NEW RELEASE	KLJ	N.O.	MES	9-3-08
B	———	ADDED SECTION A-A	WFB	JTD	N.O.	8-5-13
C	102982	REVISED NOTE 4	LD	NO	CS	5-16-23

RoHS COMPLIANT 515-1071F

Part Numbers with the "F" suffix ending are RoHS Compliant.
Packaging is marked with "RoHS Compliant" label or equivalent markings.

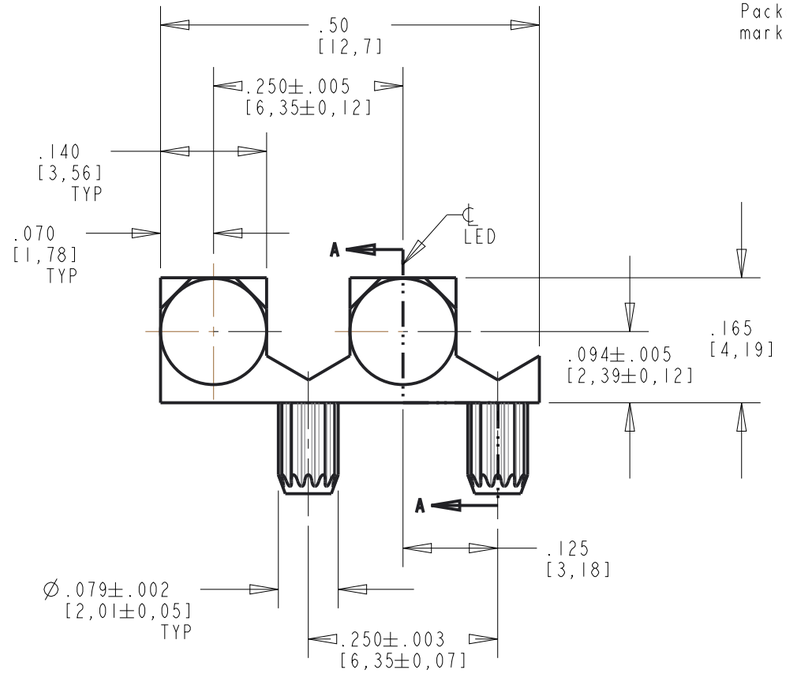

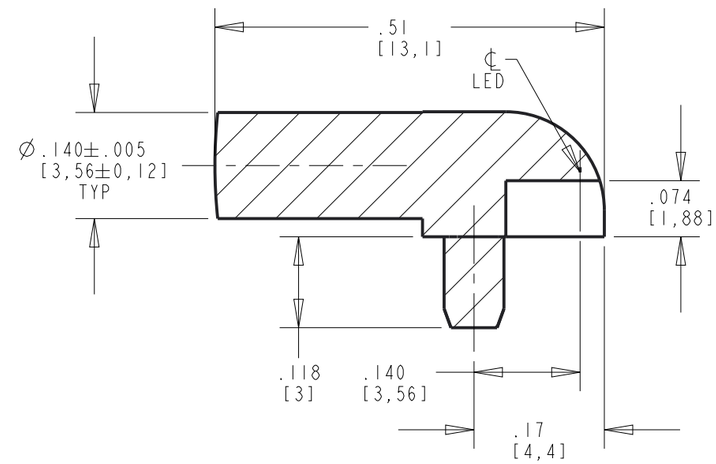

SECTION A-A

NOTES:

1. COMPONENTS TO BE MOLDED IN A CLEAR TRANSMISSIVE POLYCARBONATE (UL 94V-0 FLAMMABILITY CLASS).
2. FINISH FOR THE FRONT CURVED AREA ONLY.
3. COMPONENTS DESIGNED TO BE PRESSED INTO P.C. BOARD.
4. RECOMMENDED SURFACE MOUNT DIALIGHT LEDS: 599-04XX-127F (SINGLE COLOR)
5. DIALIGHT PART NUMBER: 515-1071F

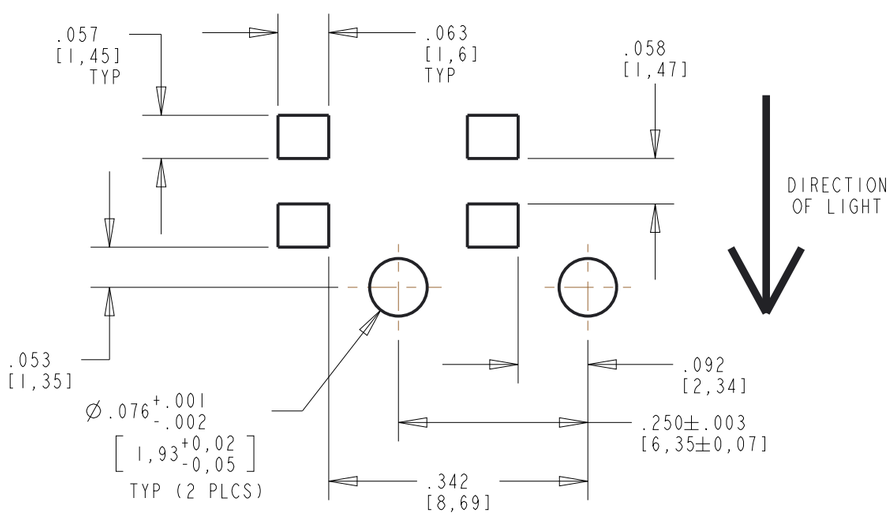

RECOMMENDED SOLDER PAD/HOLES LAYOUT

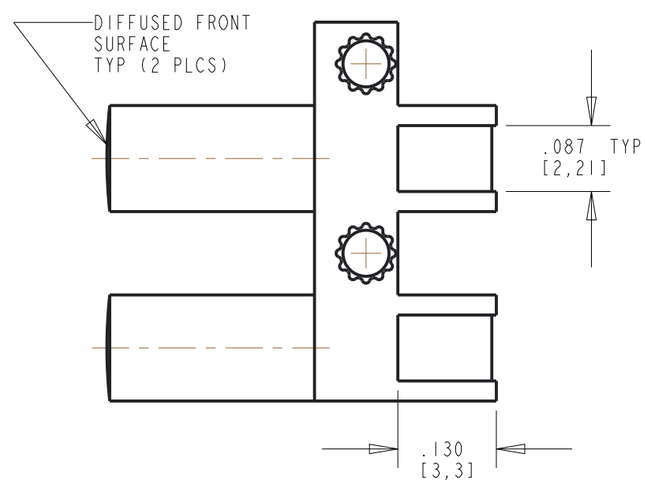

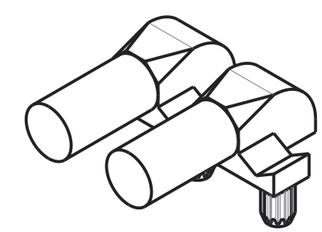

SCALE 3.000

THIS DRAWING AND THE CONTENTS HEREIN ARE CONFIDENTIAL AND THE SOLE PROPERTY OF DIALIGHT CORP. REPRODUCTION OF THIS DRAWING OR CONSTRUCTION OF ANY PARTS WITHIN THIS DRAWING ARE FORBIDDEN WITHOUT THE WRITTEN CONSENT OF DIALIGHT CORP.

SCALE: 5.000
ALL DIM's: INCH (mm)

TOLERANCES:
UNLESS OTHERWISE SPECIFIED
FRACTIONS: ±1/64
DECIMALS (.XX): ±.02
DECIMALS (.XXX): ±.015
DECIMALS (.XXXX): ±.0005
ANGLES: ±3°

FINISH

FSCM 83330

DRAWING NUMBER: C-17656
REV: B

TITLE: 2-ELEMENT LIGHT PIPE RoHS COMPLIANT

MATERIAL

Dialight
1501 ROUTE 34 SOUTH
FARMINGDALE, NJ 07727
(732) 919-3119
www.dialight.com

SHEET 1 OF 1
FAMILY TABLE: