REV	ECN NO	REVISIONS	DRN	CKD	APP	QA	CM	DATE
A	——	NEW RELEASE	KLJ	NO				8-4-08

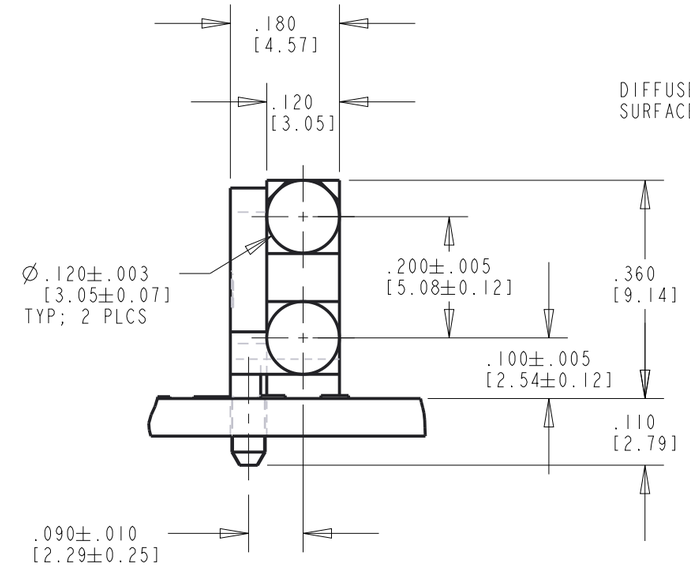

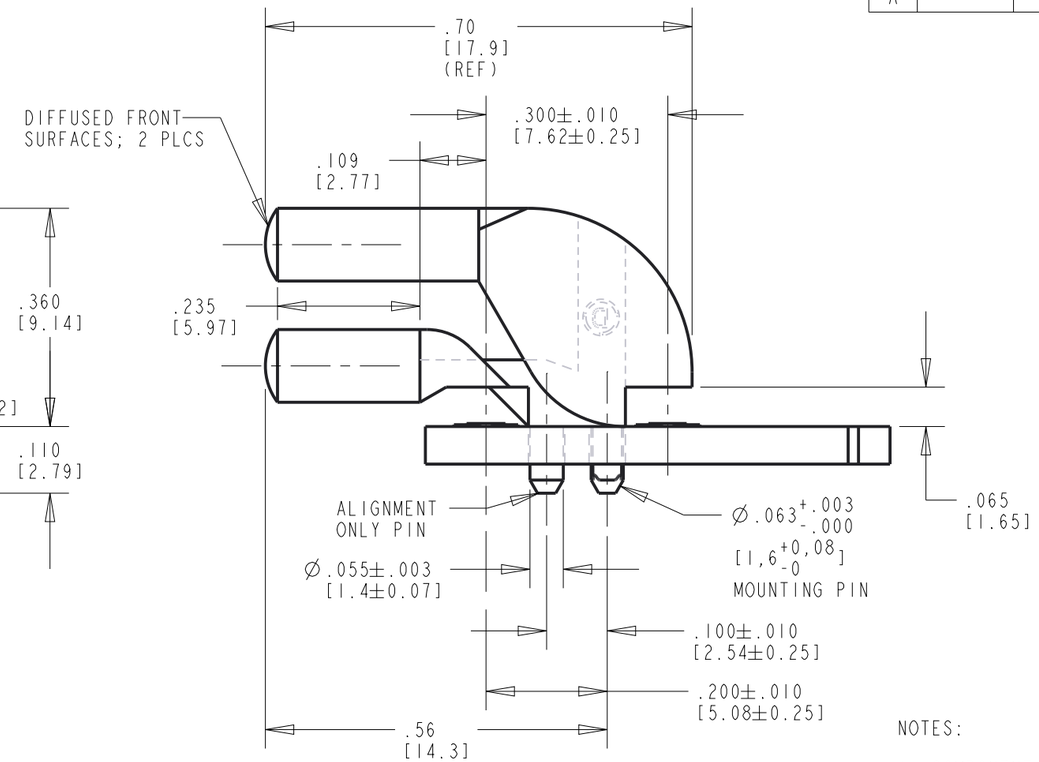

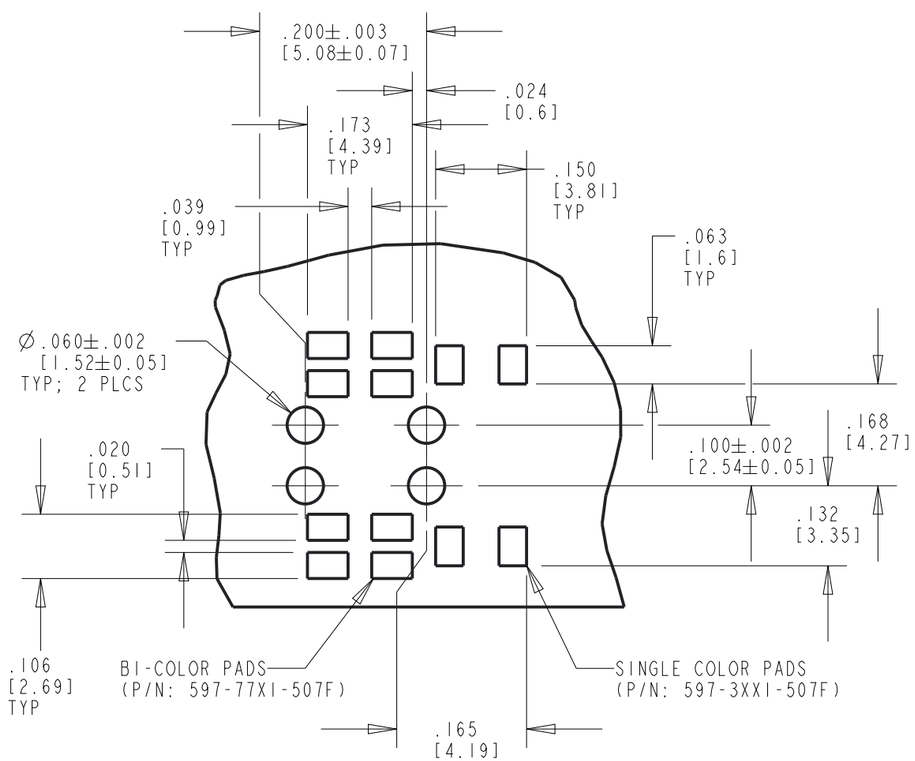

SOLDER PAD/HOLES LAYOUT

NOTES:

1. COMPONENTS TO BE MOLDED IN A CLEAR TRANSMISSIVE POLYCARBONATE (UL 94V-0 FLAMMABILITY).
2. MINIMUM ALLOWABLE PITCH IS .200 FOR EITHER BI-COLOR OR SINGLE.
3. COMPONENTS DESIGNED TO BE PRESSED INTO P.C. BOARD.
4. OPERATING/STORAGE TEMPERATURE: -30°C TO +100°C
5. RECOMMENDED LIGHT SOURCES: SINGLE OR BI-COLOR SMT LEDS (DIALIGHT P/N'S: 597-3XXI-50XF, 597-77XI-50XF)
6. DIALIGHT PART NUMBER: 515-1094F

RoHS COMPLIANT 515-1094F

Part Numbers with the "F" suffix ending are RoHS Compliant. Packaging is marked with "RoHS Compliant" label or equivalent markings.

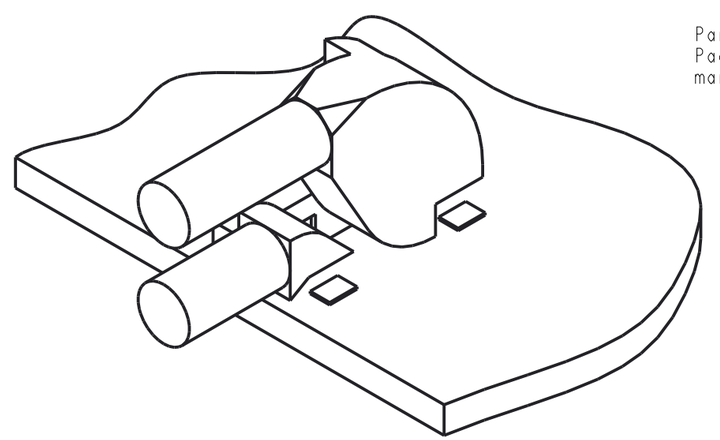

THIS DRAWING AND THE CONTENTS HEREIN ARE CONFIDENTIAL AND THE SOLE PROPERTY OF DIALIGHT CORP. REPRODUCTION OF THIS DRAWING OR CONSTRUCTION OF ANY PARTS WITHIN THIS DRAWING ARE FORBIDDEN WITHOUT THE WRITTEN CONSENT OF DIALIGHT CORP.

SCALE: DRAWING SCALE
ALL DIM'S: INCH (mm)
TOLERANCES:
UNLESS OTHERWISE SPECIFIED
FRACTIONS: ±1/64
DECIMALS (.XX): ±.02
DECIMALS (.XXX): ±.015
DECIMALS (.XXXX): ±.0005
ANGLES: ±3°
FINISH
FSCM 83330

DRAWING NUMBER: C-17649
REV: A
TITLE: BI-LEVEL LIGHT PIPE (EXTENDED) RoHS COMPLIANT
MATERIAL

Dialight
1501 ROUTE 34 SOUTH
FARMINGDALE, NJ 07727
(732) 919-3119
www.dialight.com

SHEET 1 OF 1
FAMILY TABLE: