Straight Blade Devices

20A, 125V, 2 Pole, 3 Wire Grounding

Hubbell-Pro™ Extra Heavy Duty Duplex Receptacles

HUBBELL

Features

- Slender/compact design
- Finder Groove Face
- Triple wipe contacts

Ordering Information

Description	Device Color	UPC	Catalog Number
Back and side wired	Red	783585127774	5362R

Listings

UL Listed to UL498 File No. E2186
Certified to CSA 22.2, No. 42
Fed. Spec. W-C-596
NEMA® WD-6 Compliant

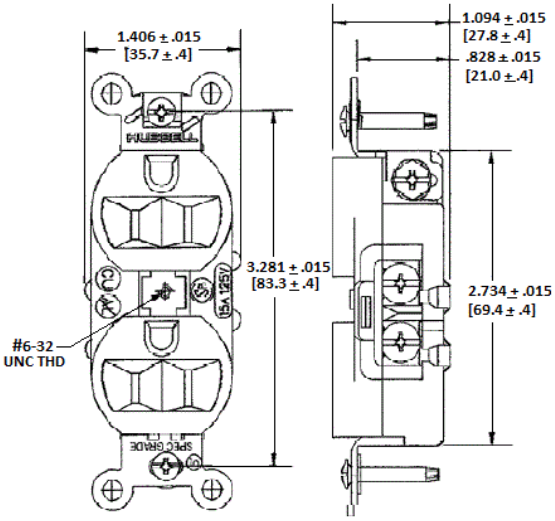

Specifications

Material	Thermoplastic/Composite
Contacts	Brass
Mounting Strap	Galvanized steel
Automatic Self-grounding Staple	Stainless steel
Mounting Screws	Zinc plated steel

Performance

Electrical

Current Interrupting	Certified for current interrupting at full rated current
Dielectric Voltage	Withstands 2,000V minimum

Mechanical

Product Identification	Ratings are a permanent part of the device
Terminal Accommodation	#12-#10 AWG copper stranded or solid conductor only
Terminal Identification	Terminal wire leads identified in accordance with UL 498

Environmental

Flammability	UL 94 V-2
Operating Temperatures	Maximum continuous 75°C; minimum -40°C (w/o impact)

Accessories

Wallplate or Weatherproof Cover Duplex Opening

Resources

Customer Use Drawing
eCatalog

Dimensions in Inches (mm)

Hubbell Wiring Device-Kellems • Hubbell Incorporated (Delaware) • 40 Waterview Drive • Shelton, CT 06484
Phone (800) 288-6000 • Fax (800) 255-1031 • Specifications subject to change without notice.

HUBBELL®
Wiring Device-Kellems