max. 340 m³/h

DC axial fans

Series 5200 N 127 x 127 x 38 mm

- **Material:** Housing: GRP[1)] (PBT)
  Impeller: GRP[1)] (PA)
- **Direction of air flow:** Exhaust over struts
- **Direction of rotation:** Counter-clockwise, seen on rotor
- **Connection:** Via single wires AWG 22, TR 64
- **Mass:** 310 g

1) Fibreglass-reinforced plastic

- **Possible special versions:**
  (See chapter DC fans - specials)
  - Speed signal
  - Go / No-go alarm
  - Alarm with limit speed
  - External temperature sensor
  - Internal temperature sensor
  - PWM control input
  - Analogue control input
  - Protection against moisture
  - Protection against salt fog
  - Type of protection: IP 54 / IP 68

Nominal data	Air flow	Air flow	**Nominal voltage**	Voltage range	Sound pressure level	Sound power level	Sintec sleeve bearings / Ball bearings	Input power**	Nominal speed	Temperature range	Service life L_{10} (40 °C) ebm-papst Standard / Service life L_{10} (T_{max}) ebm-papst Standard	Life expectancy L_{10IPC} (40 °C) see page 17	Curve
Type	**m³/h**	**CFM**	**VDC**	**VDC**	**dB(A)**	**Bel(A)**	□/■	**Watts**	**rpm**	**°C**	**Hours**	**Hours**	
5212 NM	187	110	**12**	7...14,5	43	5,3	■	4,1	2 750	-20...+75	62 500 / 27 500	105 000	①
5212 NN	216	127	**12**	7...14	46	5,6	■	6,2	3 150	-20...+70	57 500 / 25 000	97 500	②
5212 NH	252	148	**12**	7...14	51	6,0	■	9,8	3 650	-20...+70	45 000 / 22 500	75 000	③
5212 NHH*	340	200	**12**	9...15	58	6,6	■	19,0	4 900	-20...+65	45 000 / 25 000	75 000	④
5214 NM	187	110	**24**	12...28	43	5,3	■	4,6	2 750	-20...+75	62 500 / 27 500	105 000	①
5214 NN	216	127	**24**	12...28	46	5,6	■	6,0	3 150	-20...+75	57 500 / 25 000	97 500	②
5214 NH	252	148	**24**	12...28	51	6,0	■	9,8	3 650	-20...+70	45 000 / 22 500	75 000	③
5214 NHH*	340	200	**24**	16...30	58	6,6	■	17,5	4 900	-20...+65	45 000 / 25 000	75 000	④
5218 NM	187	110	**48**	36...56	43	5,3	■	4,5	2 750	-20...+75	62 500 / 27 500	105 000	①
5218 NN	216	127	**48**	36...56	46	5,6	■	6,2	3 150	-20...+70	57 500 / 32 500	97 500	②
5218 NH	252	148	**48**	36...56	51	6,0	■	9,6	3 650	-20...+55	45 000 / 32 500	75 000	③
5218 NHH*	340	200	**48**	36...60	58	6,6	■	18,0	4 900	-20...+65	45 000 / 25 000	75 000	④

Subject to alternations

** Input power at free air flow, these values can be significantly higher in the operating point.

***Models NHH:** Fan housing with moulded-in spacers.

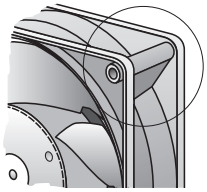

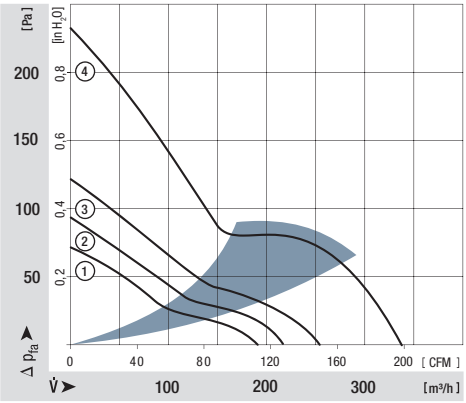

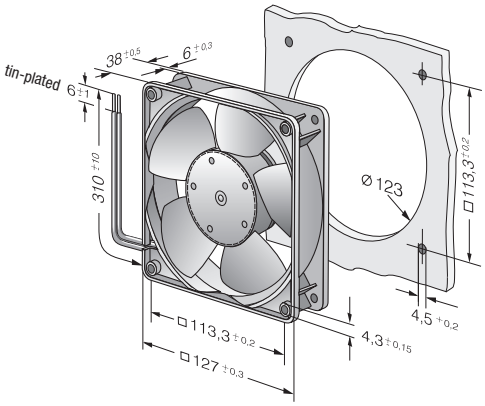

Guard grilles from p. 238

ebmpapst