THIS COPY IS PROVIDED ON A RESTRICTED BASIS AND IS NOT TO BE USED IN ANY WAY DETRIMENTAL TO THE INTERESTS OF PANDUIT CORP

NOTES:
1. DIAMETER DIMENSION SHOWN FOR REFERENCE ONLY.
2. DIMENSIONS IN BRACKETS [ ] ARE ENGLISH.
3. ALL MATERIALS AND COMPONENTS USED MUST MEET THE MATERIAL RESTRICTIONS OF RoHS (EUROPEAN DIRECTIVE 2002/95/EC ON THE RESTRICTION OF HAZARDOUS SUBSTANCES AS PROPOSED BY THE RoHS TECHNICAL ADAPTATION COMMITEE.

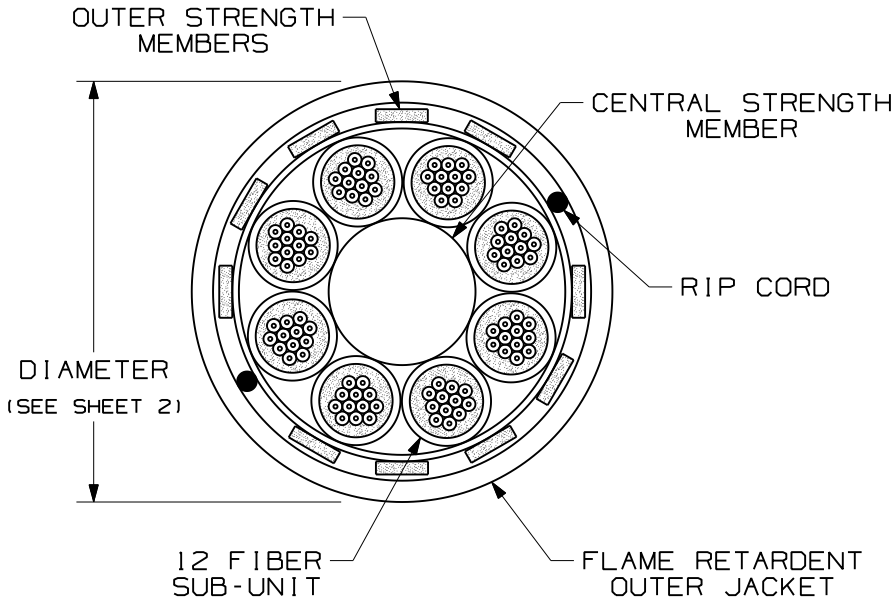

TECHNICAL SPECIFICATIONS		
MAXIMUM LOSS	SINGLEMODE MAXIMUM LOSS	
3.5 dB/KM @ 850nm 1.5 dB/KM @ 1300nm	.75 dB/KM @ 1310nm .75 dB/KM @ 1500nm	
TENSILE LOAD - RISER RATED		
INSTALLATION	LONG TERM	
2670 N (600 lbf)	890 N (200 lbf)	
TEMPERATURE		
INSTALLATION	OPERATION	STORAGE
-30° C TO +60° C -22° F TO +140° F	-40° C TO +70° C -40° F TO +158° F	-40° C TO +75° C -40° F TO +167° F

REV	DATE	BY	CHK	DESCRIPTION	ECN - R	CUST	SUP	OTH
02	10-28-09	EFK		RELEASED TO PRODUCTION	02055-92			

OPTI-CORE 96 FIBER INDOOR-OUTDOOR CABLE
WITH (8) 12 FIBER SUB-UNITS
CUSTOMER DRAWING

PANDUIT™ CORP.
TINLEY PARK, ILL 60477

THIRD ANGLE PROJECTION

ALL DIMENSIONS ARE GIVEN IN INCHES, UNLESS OTHERWISE SPECIFIED.
DIMENSIONAL TOLERANCES ARE:
(.X) (.XXX)±0.3 [.010]
(.XX)±0.8 [.03] ANGLES

DRAWN BY: MC
DATE: 06-03-05
CHK'D: WMA
REVIEW DRAWING NUMBERS

DRAWING FILENAME: M02055BZ_DC_96/00C
SCALE: NONE
PART NO.: FSN**96Y FON**96Y
DRAWING NO.: 02055-92
SHEET 1 OF 2
SIZE: A

THIS COPY IS PROVIDED ON A RESTRICTED BASIS AND IS NOT TO BE USED IN ANY WAY DETRIMENTAL TO THE INTERESTS OF PANDUIT CORP

PANDUIT PART NUMBER	FIBER TYPE	JACKET RATING	DIAMETER	BEND RADIUS	
				INSTALLATION	LONG TERM
FSNR996Y	SINGLEMODE 9/125	OFNR	13.7mm [0.541"]	20.6cm (8.1")	13.7cm [5.4"]
FSNL996Y		OFNR-LS			
FSNP996Y		OFNP	13.4mm [0.541"]	20.0cm (7.9")	13.4cm [5.3"]
FSNR696Y	MULTIMODE 62.5/125	OFNR	13.7mm [0.541"]	20.6cm (8.1")	13.7cm [5.4"]
FSNP696Y		OFNR-LS			
FSNL696Y		OFNP	13.4mm [0.541"]	20.0cm (7.9")	13.4cm [5.3"]
FSNR596Y	MULTIMODE 50/125	OFNR	13.7mm [0.541"]	20.6cm (8.1")	13.7cm [5.4"]
FSNL596Y		OFNR-LS			
FSNP596Y		OFNP	13.4mm [0.541"]	20.0cm (7.9")	13.4cm [5.3"]
FONRX96Y	MULTIMODE 50/125 OM3	OFNR	13.7mm [0.541"]	20.6cm (8.1")	13.7cm [5.4"]
FONLX96Y		OFNR-LS			
FONPX96Y		OFNP	13.4mm [0.541"]	20.0cm (7.9")	13.4cm [5.3"]
FONRZ96Y	MULTIMODE 50/125 OM4	OFNR	13.7mm [0.541"]	20.6cm (8.1")	13.7cm [5.4"]
FONPZ96Y		OFNP	13.4mm [0.541"]	20.0cm (7.9")	13.4cm [5.3"]

REV	DATE	BY	CHK	DESCRIPTION	ECN - R	CUST	SUP	OTH
02	02-09-07	EFK		RELEASED TO PRODUCTION	02055-92			

OPTI-CORE 96 FIBER INDOOR-OUTDOOR CABLE
WITH (8) 12 FIBER SUB-UNITS
CUSTOMER DRAWING

PANDUIT™ CORP.
TINLEY PARK, ILL 60477

THIRD ANGLE PROJECTION

ALL DIMENSIONS ARE GIVEN IN INCHES, UNLESS OTHERWISE SPECIFIED.
DIMENSIONAL TOLERANCES ARE:
(.X) (.XXX)±0.3 [.010]
(.XX)±0.8 [.03] ANGLES

DRAWN BY: MC
DATE: 06-03-05
CHK'D: WMA

REVIEW DRAWING NUMBERS

DRAWING FILENAME: M02055BZ_DC_96/00C
SCALE: NONE
PART NO.: FSN**96Y FON**96Y
DRAWING NO.: 02055-92
SHEET 2 OF 2
SIZE: A