REV	DESCRIPTION	BY DATE	APPD
04	ER040854	KPL 03/14/12	DCAM

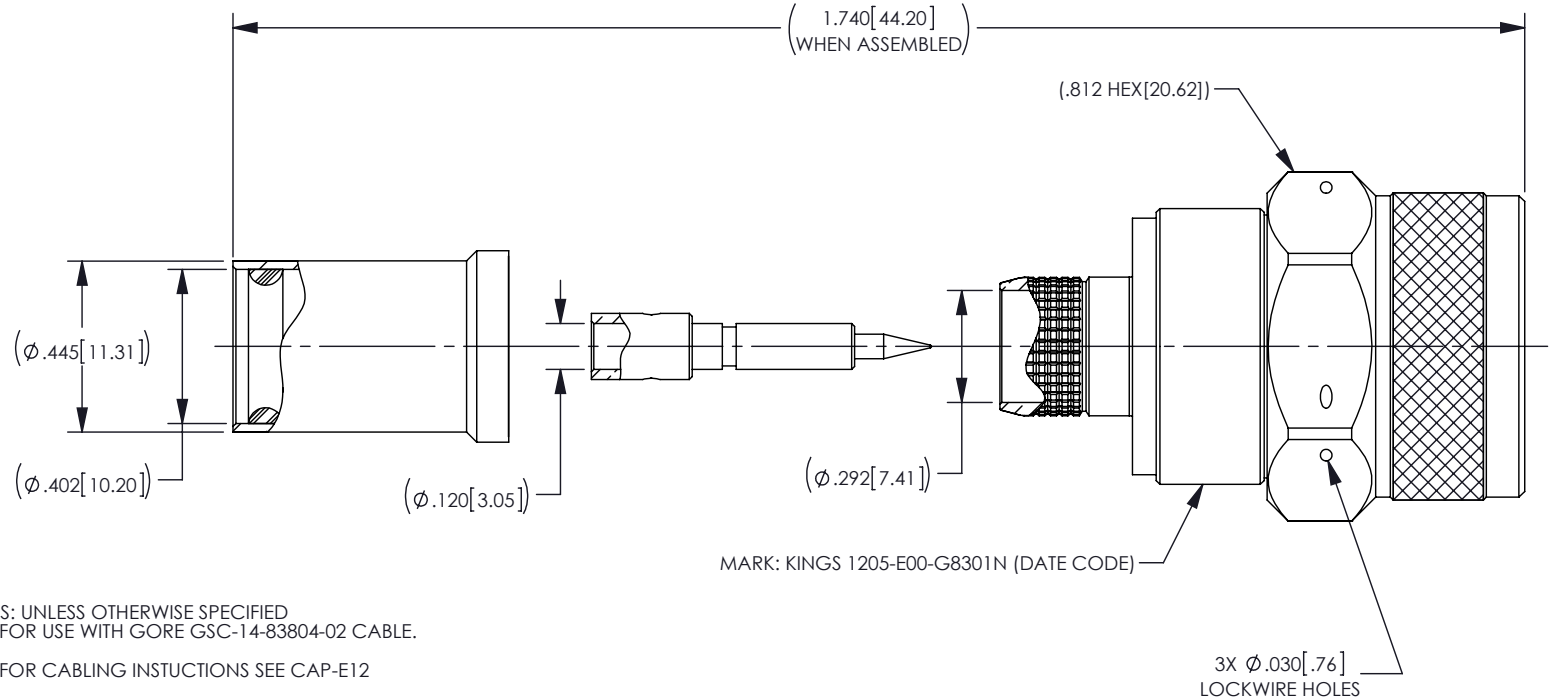

NOTES: UNLESS OTHERWISE SPECIFIED

1. FOR USE WITH GORE GSC-14-83804-02 CABLE.
2. FOR CABLING INSTUCTIONS SEE CAP-E12
3. FOR CRIMPING USE DIE KTH-2346, (CONTACT .144 HEX),(K-GRIP SLEEVE .402 HEX)
4. INTERFACE PER MIL-STD-348, SERIES N PIN CONTACT
5. K-GRIP SLEEVE & CENTER CONTACT SUPPLIED UNASSEMBLED.
6. MATERIALS:
   - K-GRIP SLEEVE: COMMERCIAL BRONZE, ASTM B135
   - GASKET: SILICONE, A-A-59588
   - C-RING & OUTER CONTACT: PHOS. BRONZE, ASTM B103
   - INSULATOR: TEFLON, ASTM D1710
   - ALL OTHER METALS PARTS: BRASS, ASTM B16
7. FINISHES:
   - CENTER CONTACT: .000050 MIN NICKEL PLATE PER AMS QQ-N-290 OVER MIN COPPER PER ASTM B734 (RoHS)
   - OUTER CONTACT: .000020 MIN SILVER PLATE PER ASTM B700 OVER COPPER PER ASTM B734 (RoHS)
   - ALL OTHER METAL PARTS: .000050 MIN GOLD PLATE PER ASTM B488 OVER .00050 MIN NICKEL PER AMS QQ-N-290 (RoHS)
8. ELECTRICAL CHARACTERISTICS
   - NOMINAL IMPEDENCE: 50 OHMS
   - FREQUENCY RANGE: DC TO 11 GHZ
   - WORKING VOLTAGE: 1000 VRMS
9. WEIGHT: 42.8 GRAMS

CATALOG P/N:1205-E00-G8301N

PER ASME Y14.5M-1994
UNLESS OTHERWISE SPECIFIED:
DIMENSIONS ARE IN INCHES [MM]
TOLERANCES:
DECIMAL: .XX [X.X] ± .01 [0.3]
.XXX [X.XX] ± .005 [0.13]
.XXXX [X.XXX] ± .XXXX
ANGLES: ± 2° SCALE: 2:1

KINGS® by WINCHESTER ELECTRONICS
Winchester Electronics Corporation
62 Barnes Industrial Road North
Wallingford, Connecticut 06492

CUSTOMER SALES DRAWING

THIRD ANGLE

PLUG, N, CRIMP
ATTACHMENT, WEATHERPROOF
(RoHS COMPLIANT)

DRAWN	DATE	APPROVED	DATE
KPL	01/17/12	DCAM	01/20/12
APPROVED	DATE	APPROVED	DATE
SM	02/21/12	GT	02/21/12

A	SD1205-E00-G8301N	SHT 1	OF 1	REV 04

DMF029 B