USB GSB Series Universal Serial Bus Connectors

Materials
Housing – Phosphor Bronze (P/B)
Platting on housing – Tin/Lead over Ni
Insulator – 94V-0 thermoplastic
Contacts – P/B with 50µ" Ni

Electrical
Current – 1A
Voltage – 30VAC/rms 60Hz

Temperature
-40 to 85ºC

Durability
1500 cycles

Features
Full metal shell for ESD shielding
Interface speeds of 12Mbs

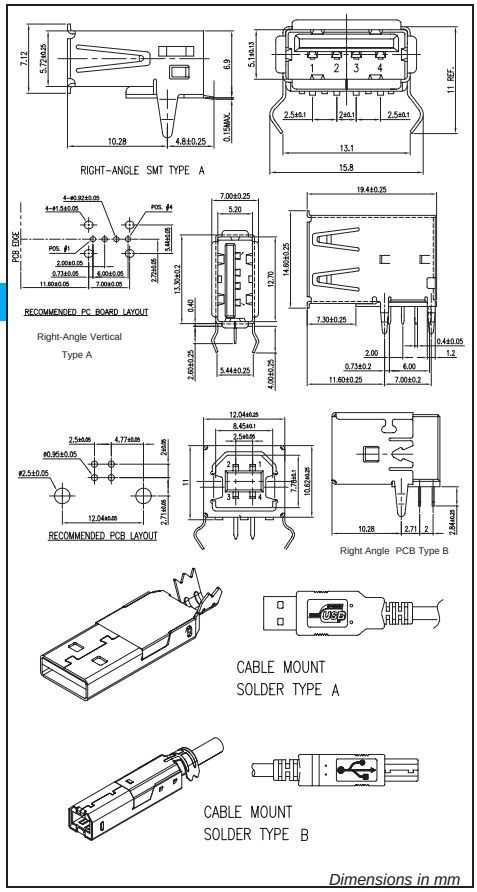

Part Number System:

GSB X X X X X X

USB Connector

SERIES TYPE
1: Type A
2: Type B

MOUNTING STYLE
1: DIP Straight
2: DIP R/A Horizontal
4: SMT R/A Horizontal
5: Cable Mount Solder Contact
6: Cable Mount Crimp Contact
9: DIP R/A Vertical

STRUCTURE
1: Standard (Single Port)
2: Stacked (R/A DIP only)

CONTACT FINISH
1: Gold Flash
2: 30µ" Gold

FACTORY CODE
A: With Amphenol logo
H: High Temperature
FRS: With rear/front shell spring
RS: With rear Shell
P: For PC99 system
01: Cable Mount shell Crimp size 6x6.8mm
02: Cable Mount shell Crimp size 7x9mm
C: Cutted Boardlocks

Suffix may be added to Part Number. This Suffix is for Internal use mainly. Additional Suffix 'EU' or 'LF' may be added for RoHS compliant product.

COLOUR OF INSULATION
0: White
1: Black
2: Beige

GSB Series USB Cable Assemblies

Type A to Type B cable assemblies

Part Number:	Length	Part Number:	Length
GSB70 97019	1000mm	GSB70 97024	3500mm
GSB70 97020	1500mm	GSB70 97025	4000mm
GSB70 97021	2000mm	GSB70 97026	4500mm
GSB70 97022	2500mm	GSB70 97027	5000mm
GSB70 97023	3000mm		

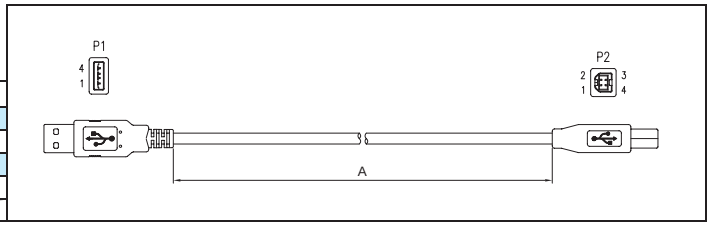

Mini USB Mini Universal Serial Bus

Materials
Housing – Phosphor Bronze (P/B)
Platting on housing – Tin/Lead over Ni
Insulator – 94V-0 thermoplastic
Contacts – P/B with 50µ" Ni

Electrical
Current – 0.5A
Voltage – 30VAC/rms 60Hz

Temperature
-40 to 85ºC

Durability
1500 cycles

Features
Full metal shell for ESD shielding
Interface speeds of 12Mbs

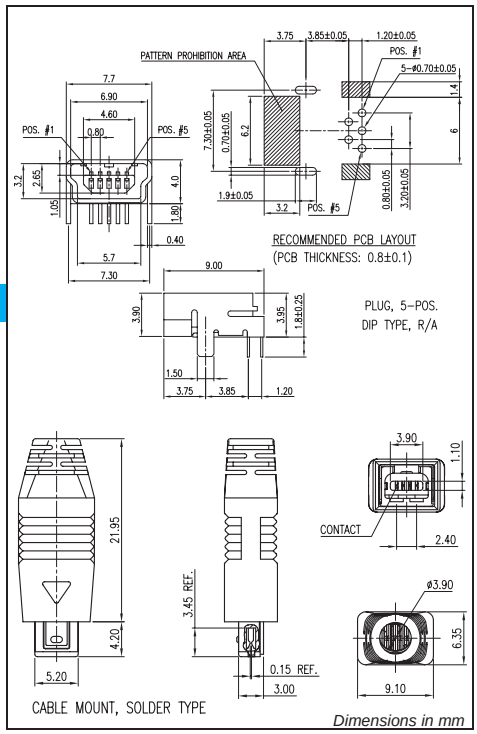

Part Number System:

GMSB X X X X X X

Mini USB Connector

NUMBER OF POSITIONS
04: 4 Postions
05: 5 Positions

MOUNTING STYLE
2: DIP Right Angle
3: SMT Right Angle
4: Cable Mount Solder Type

CONTACT FINISH
0: Gold Flash
1: 15 µ" Gold
2: 30µ" Gold

AMTA

Suffix may be added to Part Number. This Suffix is for Internal use mainly. Additional Suffix 'EU' or 'LF' may be added for RoHS compliant product.

PACKING OPTION
0: Tube
1: Tape & Reel (SMT only)
2: PE Bag
3: Tray

COLOUR OF INSULATION
0: White
1: Black (Standard)
2: Beige