3-5435640 -5 Product Details

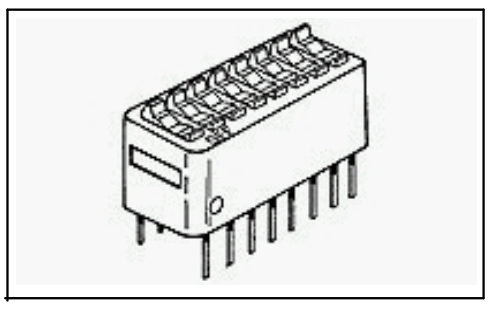

3-5435640 -5

Active

DIP, Rotary DIP, SIP Switches and DIP Shunts - Standard

RoHS Compliant (Statement of Compliance)

Product Highlights:

- DIP Switch
- PCB Mount Style = Thru Hole
- Single Pole - Single Throw Configuration (Pole -Throw)
- Actuator Style = Rocker (Top Actuated)
- Sealed

View all Features

Quick Links

Check Pricing & Availability
Search for Tooling
Product Feature Selector
Contact Us About This Product

Documentation & Additional Information

Product Drawings:

- SWITCH ASSY, DIP, TYPE C, 7100 SERIES, SPST, STANDARD (PDF, English)

Catalog Pages/Data Sheets:

- None Available

Product Specifications:

- None Available

Application Specifications:

- Dual In -Line Package (DIP) Programming Switches (700... (PDF, English)

Instruction Sheets:

- Dual In -Line Package (DIP) Programming Switches (700... (PDF, English)

CAD Files:

- None Available

List all Documents

Additional Information:

- Product Line Information

Additional Product Images:

- Recommended PC Board Hole Pattern

Related Products:

- Tooling

Product Features (Please use the Product Drawing for all design activity)

Product Type Features:

- Product Type = DIP Switch
- PCB Mount Style = Thru Hole
- Configuration (Pole -Throw) = Single Pole - Single Throw
- Actuator Style = Rocker (Top Actuated)
- Sealed = Yes
- Number of Switches = 4

Termination Related Features:

- Seal Type = Standard
- Termination Post Length (mm [in]) = 3.56 [0.140]

Body Related Features:

- Series = 7100
- Centerline (mm [in]) = 2.54 [0.100]

Contact Related Features:

- Auto -Insertable = No
- Contact Material = Copper Alloy
- Contact Mating Area Plating = Gold (30) over Nickel (50)

Housing Related Features:

- Housing Color = Blue
- Housing Material = Polyester
- Housing Flammability Rating = UL 94V -0

Industry Standards:

- RoHS/ELV Compliance = RoHS compliant, ELV compliant
- Lead Free Solder Processes = Wave solder capable to 240°C, Wave solder capable to 260°C, Wave solder capable to 265°C
- RoHS/ELV Compliance History = Always was RoHS compliant

Packaging Related Features:

- Packaging Method = Loose Piece
- Packaging Quantity = 25

Other:

- Brand = Alcoswitch

© 2007 Tyco Electronics Corporation All Rights Reserved