Product Details for 5552744 -2

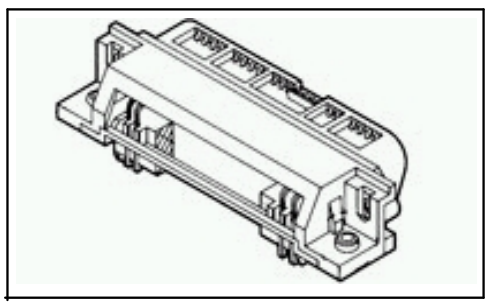

5552744 -2

Active

2.16 [.085] Printed Circuit Board Connectors

RoHS Compliant (Statement of Compliance)

Product Highlights:

- Receptacle
- Number of Positions = 64
- PCB Mount Style = Right Angle
- Reverse Orientation
- Standard Profile

View all Features

Quick Links

Check Pricing & Availability
Search for Tooling
Product Feature Selector
Contact Us About This Product

Documentation & Additional Information

Product Drawings:

- RECEPTACLE ASSEMBLY, 64 POSITION, RIGHT ANGLE, PCB, ... (PDF, English)

Catalog Pages/Data Sheets:

- None Available

Product Specifications:

- None Available

Application Specifications:

- None Available

Instruction Sheets:

- None Available

CAD Files:

- None Available

List all Documents

Additional Information:

- Product Line Information

Related Products:

- Tooling

Product Features (Please use the Product Drawing for all design activity)

Product Type Features:

- Gender = Receptacle
- Number of Positions = 64
- PCB Mount Style = Right Angle
- Orientation = Reverse
- Profile = Standard
- Shielded = No
- Mating Connector Lock = Without
- Special PCB Retention = With
- Special PCB Retention Method = Self -Tapping
- Grounded = No
- Panel Thickness (mm [in]) = 1.57 [0.062]
- Color = Black
- Bracket Material = Thermoplastic

Mechanical Attachment:

- Panel Attachment = With
- Panel Attachment Style = Rear Mount
- Plate Material = Thermoplastic
- Comb Material = Thermoplastic

Termination Related Features:

- Solder Tail Plating = Tin

Body Related Features:

- PCB Tail Length (mm [in]) = 4.75 [0.187]

Contact Related Features:

- Contact Mating Area Plating = Gold over Nickel
- Contact Material = Copper Alloy

Housing Related Features:

- Housing Material = Thermoplastic
- Housing Flammability Rating = UL 94V -0

Industry Standards:

- RoHS/ELV Compliance = RoHS compliant, ELV compliant
- Lead Free Solder Processes = Wave solder capable to 240°C, Wave solder capable to 260°C, Wave solder capable to 265°C
- RoHS/ELV Compliance History = Always was RoHS compliant

Other:

- Brand = AMP

© 2006 Tyco Electronics Corporation All Rights Reserved