Product Details for 5645945 -1

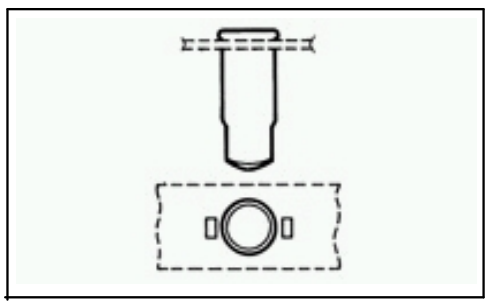

5645945 -1

Active

Discrete Sockets

RoHS Compliant (Statement of Compliance)

Product Highlights:

- Socket
- Mating Pin Dia. Range = .38 - .53 mm
- Socket Length = 4.01 mm
- Sleeve Style = Bullet Nose
- Tin Sleeve Plating

View all Features

Quick Links

Check Pricing & Availability
Search for Tooling
Product Feature Selector
Contact Us About This Product

Documentation & Additional Information

Product Drawings:

- MINIATURE SPRING SOCKET ASSEMBLY SERIES 1 SHORT (PDF, English)

Catalog Pages/Data Sheets:

- None Available

Product Specifications:

- None Available

Application Specifications:

- None Available

Instruction Sheets:

- None Available

CAD Files:

- None Available

List all Documents

Additional Information:

- Product Line Information

Related Products:

- Tooling

Product Features

(Please use the Product Drawing for all design activity)

Product Type Features:

- Product Type = Socket
- Socket Length (mm [in]) = 4.01 [0.158]
- Sleeve Style = Bullet Nose
- Sealant = Without
- Sleeve Material = Copper
- Recommended Hole Size (mm [in]) = 1.07 [0.042]

Body Related Features:

- Mating Pin Dia. Range (mm [in]) = 0.38 – 0.53 [0.015 – 0.021]
- Spring Material = Beryllium Copper

Contact Related Features:

- Sleeve Plating = Tin
- Contact Spring Plating = Tin
- Contact Material = Beryllium Copper

Configuration Related Features:

- Insertion Method = Hand/Semi - Automatic/Automatic

Industry Standards:

- Government/Industry Qualification = No
- RoHS/ELV Compliance = RoHS compliant, ELV compliant
- Lead Free Solder Processes = Wave solder capable to 240°C, Wave solder capable to 260°C, Wave solder capable to 265°C, Reflow solder capable to 245°C, Reflow solder capable to 260°C, Pin-in-Paste capable to 245°C, Pin-in-Paste capable to 260°C
- RoHS/ELV Compliance History = Always was RoHS compliant

Operation/Application:

- Application = Production

Packaging Related Features:

- Packaging Method = Loose Piece

Other:

- Brand = AMP

© 2006 Tyco Electronics Corporation All Rights Reserved