Product Details for 5645980 -1

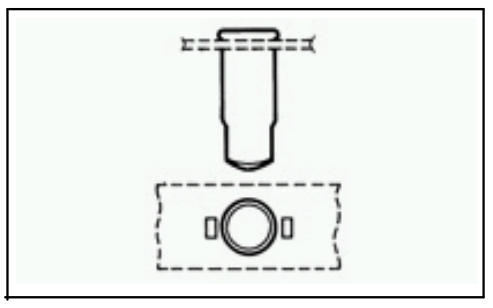

5645980 -1

Active

Discrete Sockets

RoHS Compliant (Statement of Compliance)

Product Highlights:

- Socket
- Mating Pin Dia. Range = 1.07 - 1.24 mm
- Socket Length = 7.82 mm
- Sleeve Style = Bullet Nose
- Tin Sleeve Plating

View all Features

Quick Links

Check Pricing & Availability
Search for Tooling
Product Feature Selector
Contact Us About This Product

Documentation & Additional Information

Product Drawings:

- MINIATURE SPRING SOCKET ASSEMBLY (PDF, English)

Catalog Pages/Data Sheets:

- None Available

Product Specifications:

- None Available

Application Specifications:

- None Available

Instruction Sheets:

- None Available

CAD Files:

- None Available

List all Documents

Additional Information:

- Product Line Information

Related Products:

- Tooling

Product Features

(Please use the Product Drawing for all design activity)

Product Type Features:

- Product Type = Socket
- Socket Length (mm [in]) = 7.82 [0.308]
- Sleeve Style = Bullet Nose
- Sealant = Without
- Sleeve Material = Copper
- Recommended Hole Size (mm [in]) = 2.59 [0.102]

Body Related Features:

- Mating Pin Dia. Range (mm [in]) = 1.07 – 1.24 [0.042 – 0.049]
- Spring Material = Beryllium Copper

Contact Related Features:

- Sleeve Plating = Tin
- Contact Spring Plating = Tin
- Contact Material = Beryllium Copper

Configuration Related Features:

- Insertion Method = Hand/Semi-Automatic

Industry Standards:

- Government/Industry Qualification = No
- RoHS/ELV Compliance = RoHS compliant, ELV compliant
- Lead Free Solder Processes = Wave solder capable to 240°C, Wave solder capable to 260°C, Wave solder capable to 265°C, Reflow solder capable to 245°C, Reflow solder capable to 260°C, Pin-in-Paste capable to 245°C, Pin-in-Paste capable to 260°C
- RoHS/ELV Compliance History = Always was RoHS compliant

Operation/Application:

- Application = Production

Packaging Related Features:

- Packaging Method = Loose Piece

Other:

- Brand = AMP

© 2006 Tyco Electronics Corporation All Rights Reserved