THIS DRAWING IS UNPUBLISHED. RELEASED FOR PUBLICATION -,- .
© COPYRIGHT 2011 BY TYCO ELECTRONICS CORPORATION. ALL RIGHTS RESERVED.

LOC	DIST
DW	—

REVISIONS

P	LTR	DESCRIPTION	DATE	DWN	APVD
	D	REVISED. (ECR-10-024137)	26SEP11	AW	WK

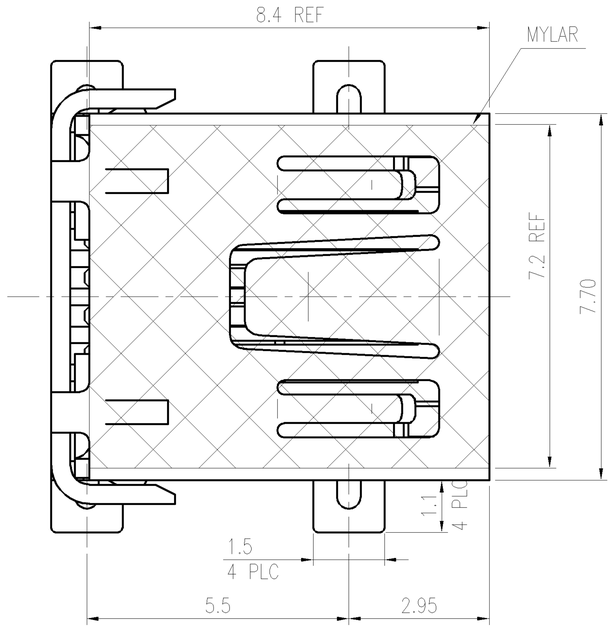

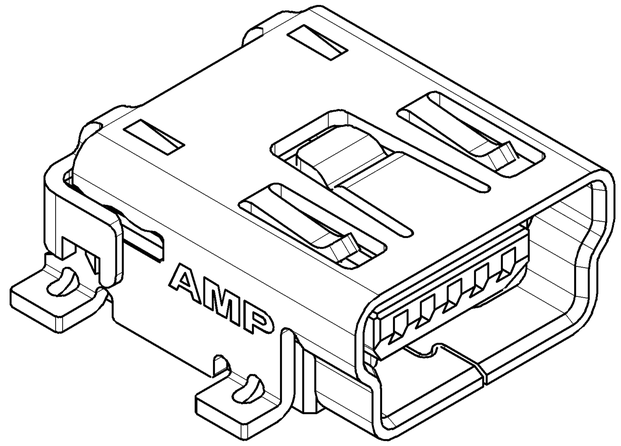

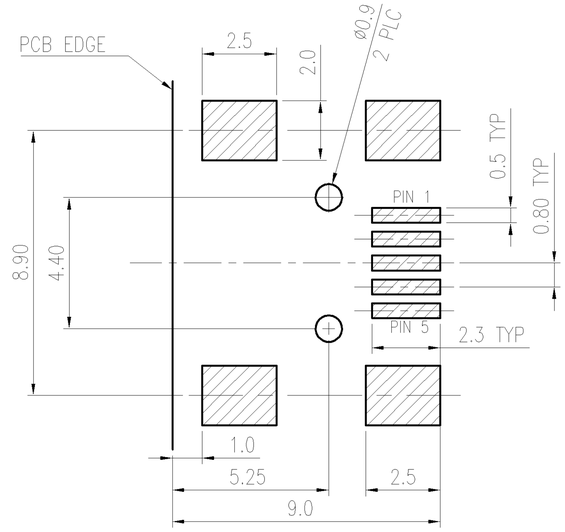

RECOMMENDED PCB LAYOUT (MOUNTING SIDE)
THICKNESS 1.57mm (TOLERANCE: ±0.05)

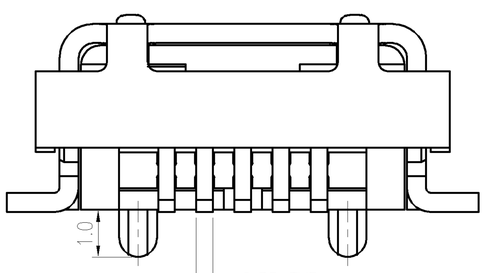

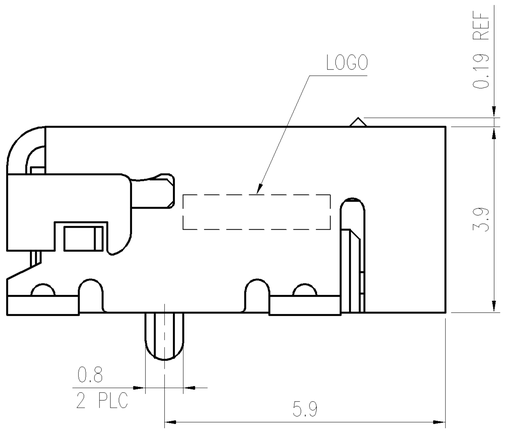

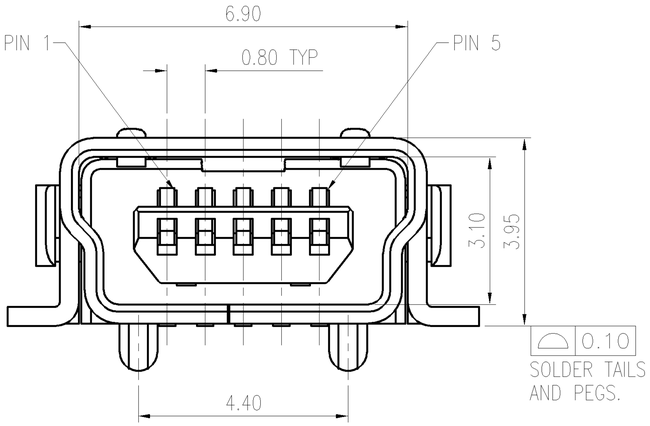

NOTE:

1. MATERIAL:
   HOUSING: PA9T WITH 33% GF, UL94 V-0, BLACK COLOR.
   CONTACTS: PHOSPHOR BRONZE.
   SHELL: PHOSPHOR BRONZE.
   MYLAR: POLYAMIDE FILM.

2. FINISH:
   CONTACTS: 0.762μm [30μ″] MIN. GOLD PLATED ON CONTACT AREA,
   A 2.54μm [100μ″] MIN. MATTE-TIN ON SOLDER TAIL,
   B 2.54μm [100μ″] MIN. MATTE-TIN ON SOLDER TAIL,
   C 3.05μm [120μ″] MIN. MATTE-TIN ON SOLDER TAIL,
   WITH ENTIRE CONTACT UNDERPLATED 1.27μm [50μ″] MIN. NICKEL.
   SHELL: A & B 2.03μm [80μ″] MIN. NICKEL PLATED OVERALL.
   C 0.76μm [30μ″] MIN. MATTE-TIN OVER 1.27μm [50μ″] MIN. NICKEL.

3. NO DATECODE ON PRODUCT SURFACE.

4. REFLOW SOLDER CAPABLE TO 260°C PER TEC 109-201, METHOD B, CONDITION B.

	PLATED	MYLAR	LONG CARRIER & COVER TAPE	PACKAGE	POST	PART NUMBER
C	W/O	W/O	TAPE REEL	W/		3-1734035-2
B	W/	W/O	TAPE REEL	W/		2-1734035-4
	W/O	W/	TAPE REEL	W/		2-1734035-3
	W/O	W/O	TAPE REEL	W/		2-1734035-2
	W/O	N/A	TRAY	W/		2-1734035-1
A	W/	W/O	TAPE REEL	W/		1734035-4
	W/O	W/	TAPE REEL	W/		1734035-3
	W/O	W/O	TAPE REEL	W/		1734035-2
	W/O	N/A	TRAY	W/		1734035-1

THIS DRAWING IS A CONTROLLED DOCUMENT.

DIMENSIONS: MM

TOLERANCES UNLESS OTHERWISE SPECIFIED:

0 PLC	± 0.38
1 PLC	± 0.25
2 PLC	± 0.13
3 PLC	± 0.05
4 PLC	± –
ANGLES	± 3°

MATERIAL: SEE NOTE

FINISH: SEE NOTE

DWN	O. HU	21DEC2007
CHK	S. HOU	21DEC2007
APVD	W. KODAMA	21DEC2007
PRODUCT SPEC	108-57062	
QUALIFICATION TEST REPORT	501-57070	
WEIGHT	--	

TE Connectivity

NAME: MINI USB, R/A, SMT, B TYPE

SIZE	CAGE CODE	DRAWING NO	RESTRICTED TO
A3	00779	C-1734035	—

CUSTOMER DRAWING | SCALE — | SHEET 1 OF 4 | REV D

THIS DRAWING IS UNPUBLISHED. RELEASED FOR PUBLICATION -,- .
© COPYRIGHT 2011 BY TYCO ELECTRONICS CORPORATION. ALL RIGHTS RESERVED.

LOC	DIST
DW	—

REVISIONS

P	LTR	DESCRIPTION	DATE	DWN	APVD
		SEE SHEET 1.			

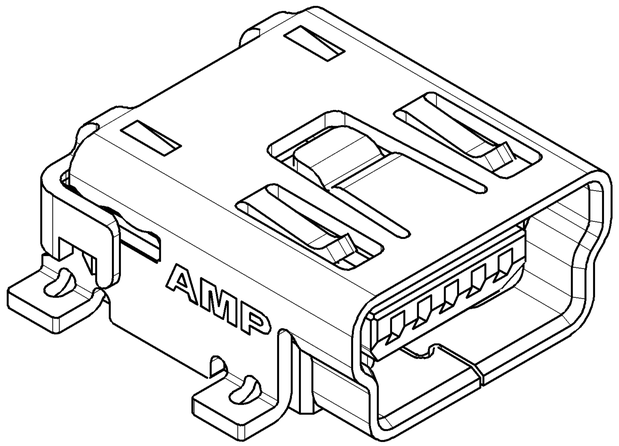

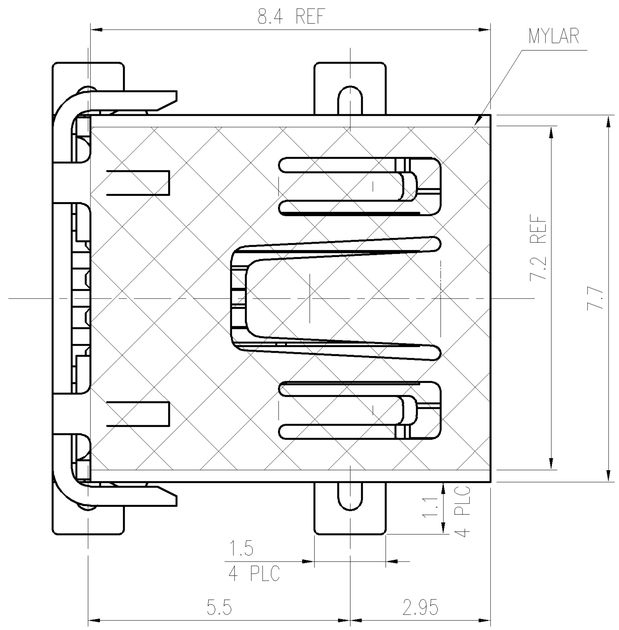

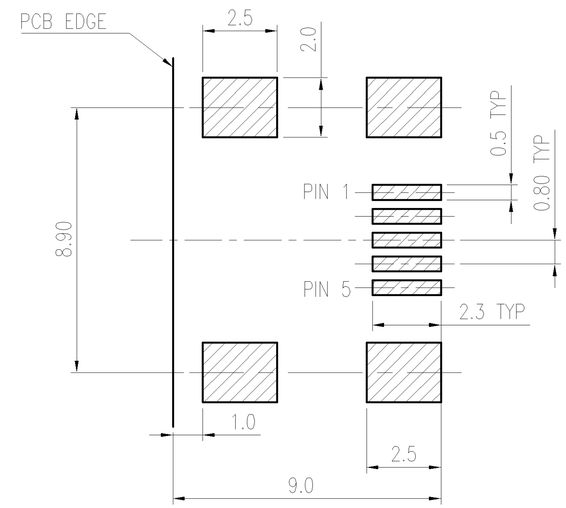

RECOMMENDED PCB LAYOUT (MOUNTING SIDE)
THICKNESS 1.57mm (TOLERANCE:±0.05)

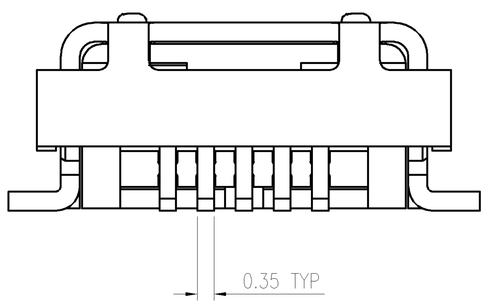

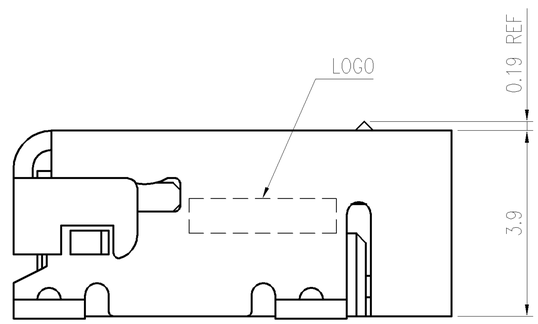

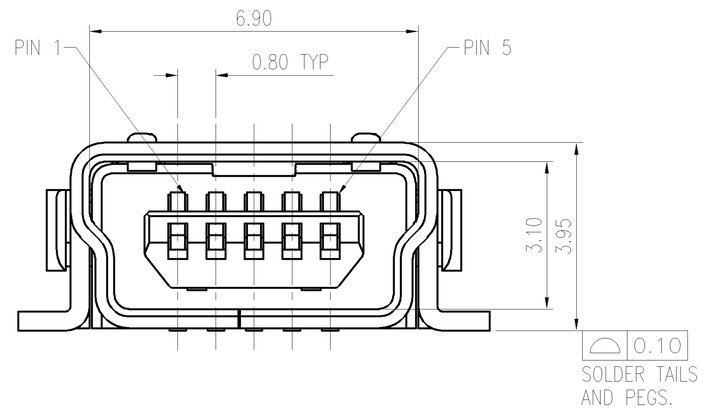

NOTE:

1. MATERIAL:
   HOUSING: PA9T WITH 33% GF, UL94 V-0, BLACK COLOR.
   CONTACTS: PHOSPHOR BRONZE.
   SHELL: PHOSPHOR BRONZE.
   MYLAR: POLYAMIDE FILM.

2. FINISH:
   CONTACTS: 0.762μm [30μ″] MIN. GOLD PLATED ON CONTACT AREA,
   2.54μm [100μ″] MIN. MATTE-TIN ON SOLDER TAIL, WITH
   ENTIRE CONTACT UNDERPLATED 1.27μm [50μ″] MIN. NICKEL.
   SHELL: 2.03μm [80μ″] MIN. NICKEL PLATED OVERALL.

3. NO DATECODE ON PRODUCT SURFACE.

4. REFLOW SOLDER CAPABLE TO 260°C PER TEC-109-201, METHOD B, CONDITION B.

W/	W/O	TAPE REEL	W/O	4-1734035-2
W/O	W/	TAPE REEL	W/O	1-1734035-3
	W/O	TAPE REEL	W/O	1-1734035-2
	N/A	TRAY	W/O	1-1734035-1
MYLAR	LONG CARRIER & COVER TAPE	PACKAGE	POST	PART NUMBER

THIS DRAWING IS A CONTROLLED DOCUMENT.

DIMENSIONS: MM

TOLERANCES UNLESS OTHERWISE SPECIFIED:

0 PLC	± 0.38
1 PLC	± 0.25
2 PLC	± 0.13
3 PLC	± 0.05
4 PLC	± –
ANGLES	± 3°

MATERIAL: SEE NOTE

FINISH: SEE NOTE

DWN
CHK
APVD
PRODUCT SPEC —
APPLICATION SPEC —
WEIGHT —

TE Connectivity

NAME: MINI USB, R/A, SMT, B TYPE

SIZE	CAGE CODE	DRAWING NO	RESTRICTED TO
A3	00779	C-1734035	—

CUSTOMER DRAWING | SCALE — | SHEET 2 OF 4 | REV D

THIS DRAWING IS UNPUBLISHED. RELEASED FOR PUBLICATION -,- .
© COPYRIGHT 2011 BY TYCO ELECTRONICS CORPORATION. ALL RIGHTS RESERVED.

LOC	DIST
DW	—

REVISIONS

P	LTR	DESCRIPTION	DATE	DWN	APVD
		SEE SHEET 1.			

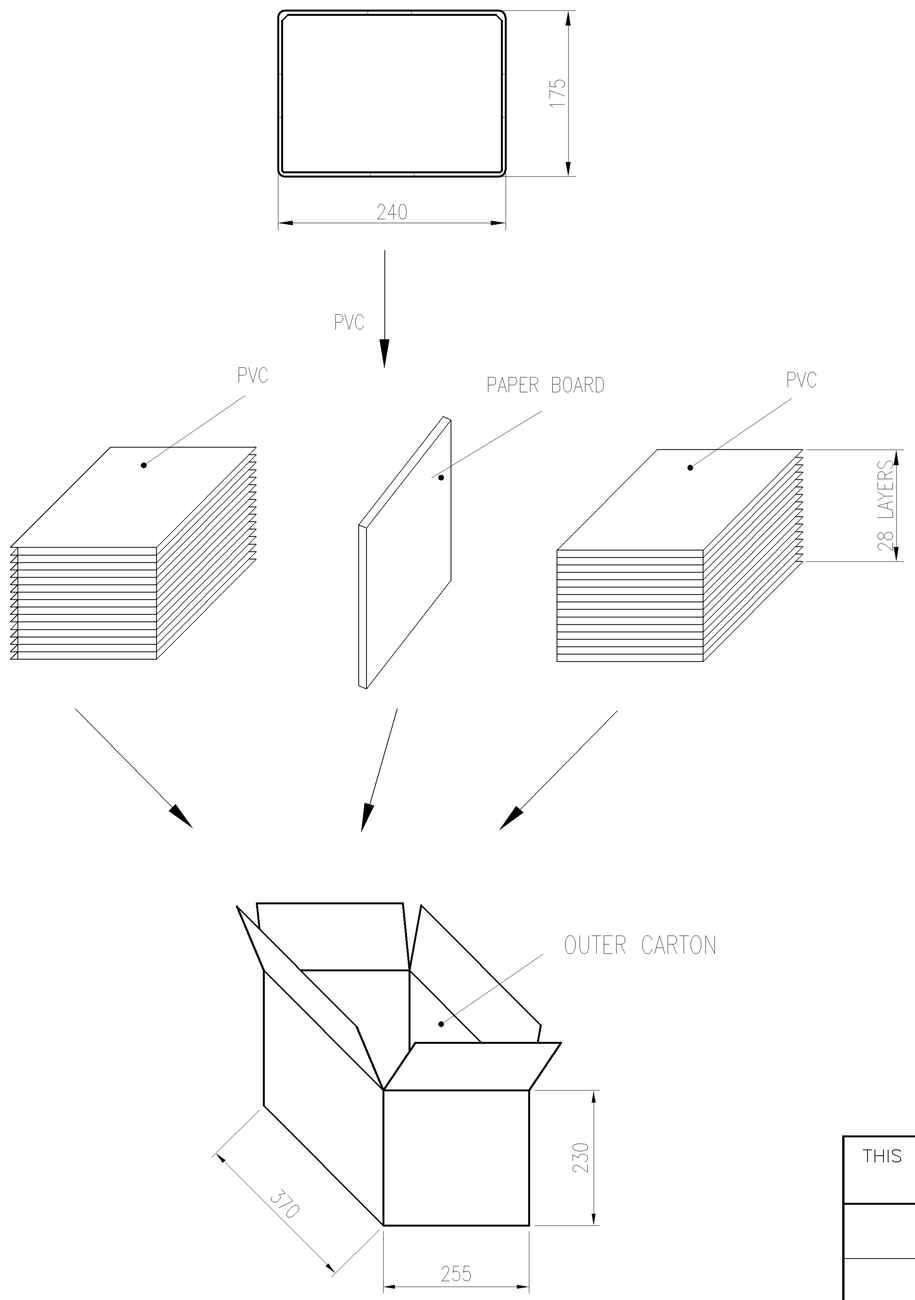

GROSS WEIGHT	NET WEIGHT	PCS/TRAY	TRAYS /CARTON	QUANTITY	PART NUMBER
9.2 Kg	6.7 Kg	150	56	8400 PCS	2-1734035-1 1-1734035-1 1734035-1

THIS DRAWING IS A CONTROLLED DOCUMENT.

DIMENSIONS: MM

TOLERANCES UNLESS OTHERWISE SPECIFIED:
0 PLC ± –
1 PLC ± –
2 PLC ± –
3 PLC ± –
4 PLC ± –
ANGLES ± –

MATERIAL –

FINISH –

DWN
CHK
APVD
PRODUCT SPEC —
APPLICATION SPEC —
WEIGHT —

TE Connectivity

NAME MINI USB, R/A, SMT, B TYPE

SIZE	CAGE CODE	DRAWING NO	RESTRICTED TO
A3	00779	C-1734035	—

CUSTOMER DRAWING | SCALE — | SHEET 3 OF 4 | REV D

THIS DRAWING IS UNPUBLISHED. RELEASED FOR PUBLICATION -,- .
© COPYRIGHT 2011 BY TYCO ELECTRONICS CORPORATION. ALL RIGHTS RESERVED.

LOC	DIST
DW	—

REVISIONS

P	LTR	DESCRIPTION	DATE	DWN	APVD
		SEE SHEET 1.			

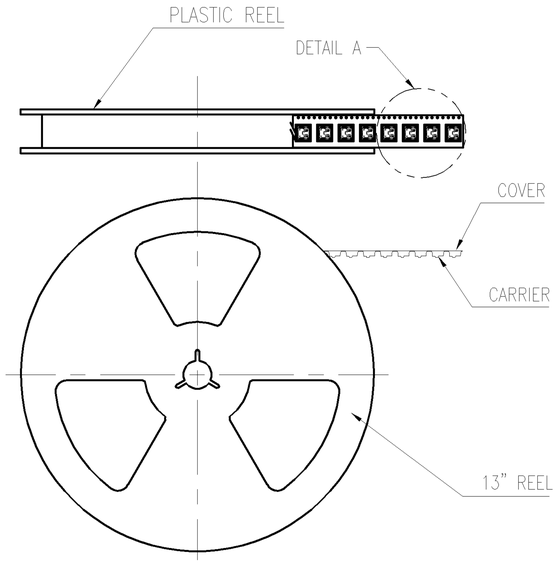

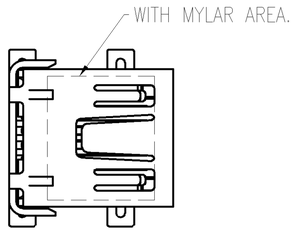

VIEW A

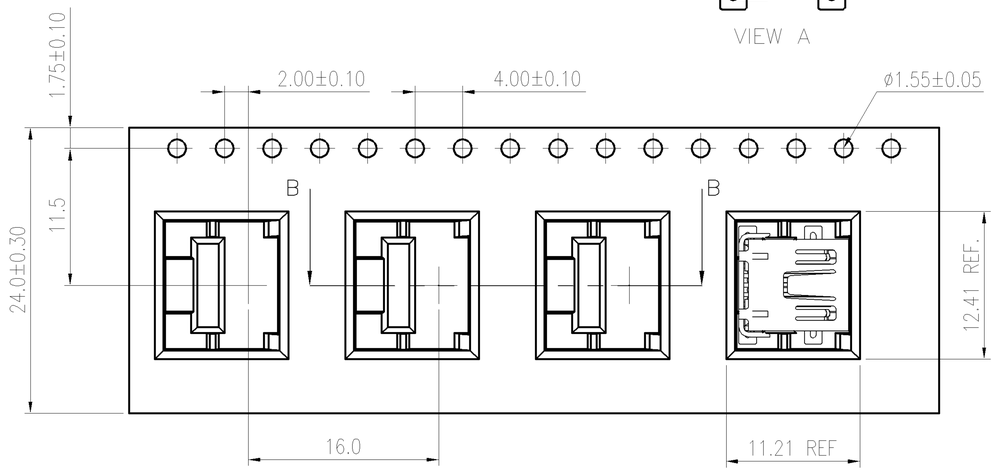

DETAIL A

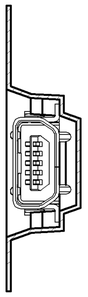

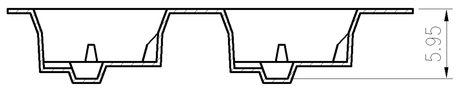

SECTION B–B

FOR 1734035–3, 1–1734035–3 AND 2–1734035–3 (LONG CARRIER & COVER TAPE)

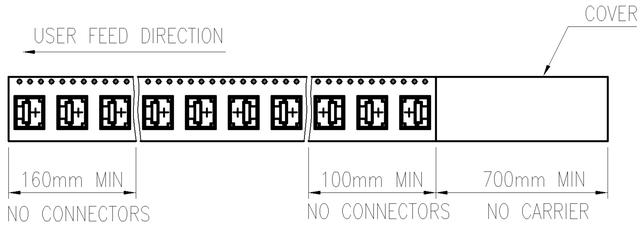

FOR 1734035–2, 1734035–4, 1–1734035–2,
3–1734035–2, 2–1734035–2 AND 2–1734035–4
4–1734035–2

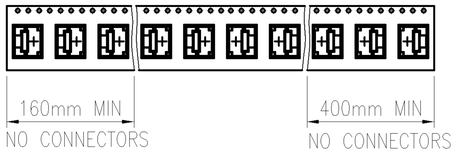

GROSS WEIGHT	NET WEIGHT	PCS/REER	REERS /CARTON	QUANTITY	MYLAR	LONG CARRIER & COVER TAPE	PART NUMBER
6.5 Kg	5.5 Kg	700	5	3500	W/	W/O	4–1734035–2
					W/O	W/O	3–1734035–2
					W/	W/O	2–1734035–4
					W/O	W/	2–1734035–3
					W/O	W/O	2–1734035–2
					W/O	W/	1–1734035–3
					W/O	W/O	1–1734035–2
					W/	W/O	1734035–4
					W/O	W/	1734035–3
					W/O	W/O	1734035–2

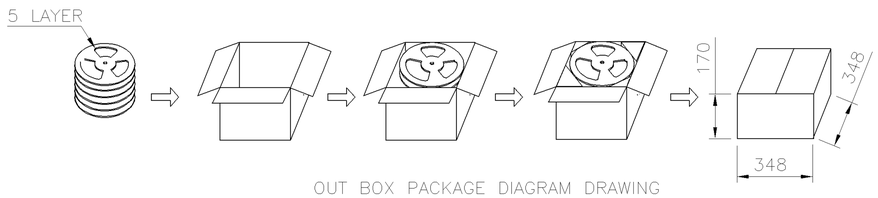

OUT BOX PACKAGE DIAGRAM DRAWING

THIS DRAWING IS A CONTROLLED DOCUMENT.

DIMENSIONS: MM

TOLERANCES UNLESS OTHERWISE SPECIFIED:
0 PLC ± –
1 PLC ± –
2 PLC ± –
3 PLC ± –
4 PLC ± –
ANGLES ± –

MATERIAL –

FINISH –

DWN
CHK
APVD
PRODUCT SPEC —
APPLICATION SPEC —
WEIGHT —

TE Connectivity

NAME
MINI USB, R/A, SMT, B TYPE

SIZE	CAGE CODE	DRAWING NO	RESTRICTED TO
A3	00779	C–1734035	—

CUSTOMER DRAWING | SCALE — | SHEET 4 OF 4 | REV D