THIS DRAWING IS UNPUBLISHED. RELEASED FOR PUBLICATION -,- .
© COPYRIGHT - By - ALL RIGHTS RESERVED.

REVISIONS

P	LTR	DESCRIPTION	DATE	DWN	APVD
	A4	P/Ns 7-2271730-1 & 8-2271730-1 ADDED	27MAR2018	FP	FP

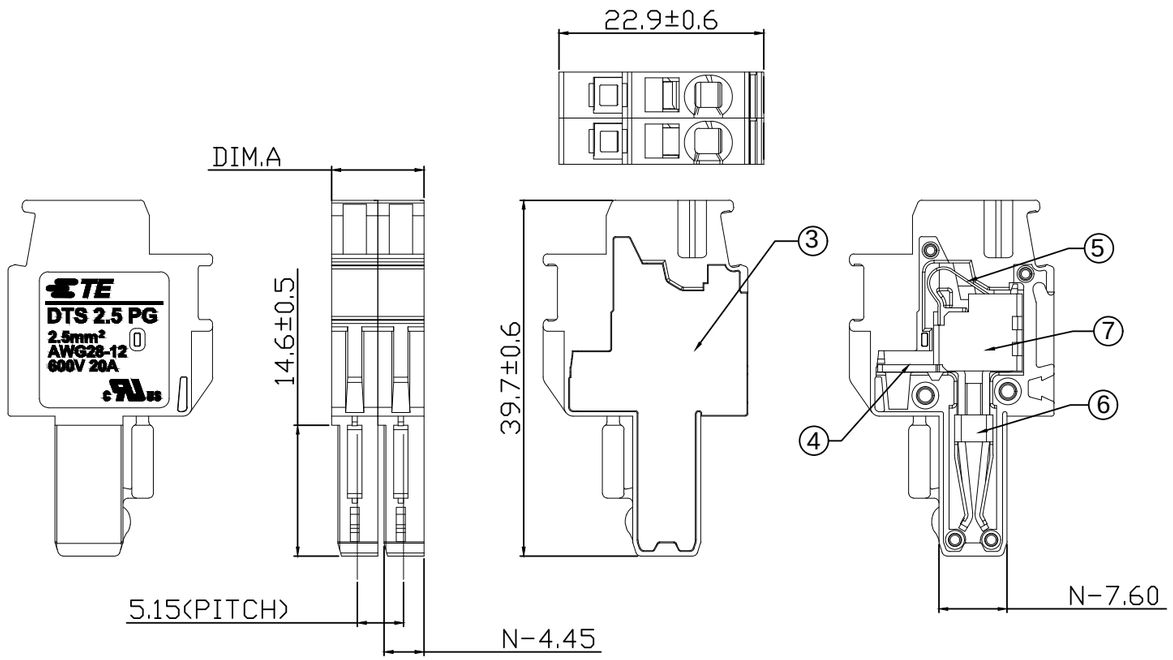

7	SHELL	STEEL	N	Cr Plated
6	SPRING	STAINLESS STEEL	N	
5	SPRING	STAINLESS STEEL	N	
4	TERMINAL	COPPER	N	Matte Tin Plated
3	COVER	THERMOPLASTIC	1	
2	HOUSING 2	THERMOPLASTIC	1	
1	HOUSING 1	THERMOPLASTIC	N-1	
ITEM	COMPONENTS	MATERIAL	Q'TY(N=poles)	PLATING

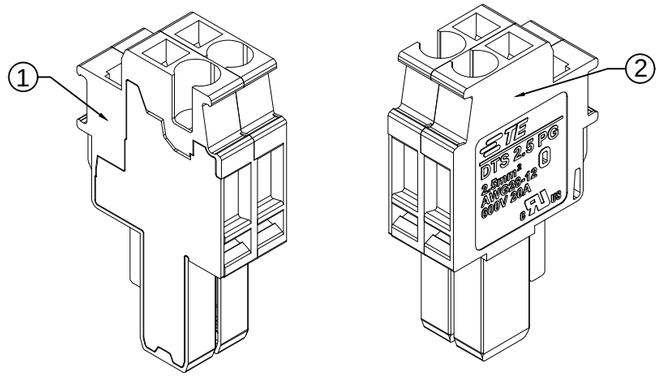

DTS 2.5 PG	6-2271730-3	ORANGE	15	77.25±3.75
	6-2271730-2	BLUE		
	6-2271730-1	GRAY		
	5-2271730-3	ORANGE	10	51.50±2.5
	5-2271730-2	BLUE		
	5-2271730-1	GRAY		
	8-2271730-1	GRAY	6	30.90±1.50
	4-2271730-3	ORANGE	5	25.75±1.25
	4-2271730-2	BLUE		
	4-2271730-1	GRAY		
	7-2271730-1	GRAY	4	20.60±1.00
	3-2271730-3	ORANGE	3	15.45±0.75
	3-2271730-2	BLUE		
	3-2271730-1	GRAY		
	2-2271730-3	ORANGE	2	10.30±0.5
	2-2271730-2	BLUE		
	2-2271730-1	GRAY		
	1-2271730-3	ORANGE	1	5.15±0.25
	1-2271730-2	BLUE		
	1-2271730-1	GRAY		
TE SERIES No.	PART NUMBER	COLOR	POLES NUMBERS (N)	DIM.A

NOTE:
1. Material:See Table
2. Rated current & voltage : 300V,20A(B&C Class);
   600V,5A(D Class)
3. Rated surge voltage: 6KV
4. Operation temperature : -40°C to +105°C
5. Wire strip length: 8mm -10mm
6. Suitable wire size : 28 - 12AWG
7. Requirement for environmental substance must be compliance with ROHS and REACH.
8. Recommanded support rail requirements refer to 114 application specification.

THIS DRAWING IS A CONTROLLED DOCUMENT.

DIMENSIONS: mm

TOLERANCES UNLESS OTHERWISE SPECIFIED:

0 PLC	± 0.50
1 PLC	± 0.40
2 PLC	± 0.30
3 PLC	± -
4 PLC	± -
ANGLES	± 3°

MATERIAL: SEE TABLE

FINISH: -

DWN	FENCER YU	01MAR2017
CHK	XIANG XU	01MAR2017
APVD	XIANG XU	01MAR2017
PRODUCT SPEC	108-137138	
APPLICATION SPEC	114-137138	
WEIGHT	3.50 g	

TE Connectivity

NAME: PLUG FOR SPRING TERMINAL BLOCK
-
-

SIZE	CAGE CODE	DRAWING NO	RESTRICTED TO
A3	00779	C-2271730	—

CUSTOMER DRAWING | SCALE 1:1 | SHEET 1 OF 1 | REV A4