THIS DRAWING IS UNPUBLISHED. RELEASED FOR PUBLICATION -,- .
© COPYRIGHT - BY TYCO ELECTRONICS CORPORATION. ALL RIGHTS RESERVED.

LOC	DIST
AG	1

REVISIONS

P	LTR	DESCRIPTION	DATE	DWN	APVD
	AE	REVISED PER ECO-05-002780	25MAY06	GS	MS
	AE1	REVISED PER ECO-09-020932	04SEP09	KK	AEG

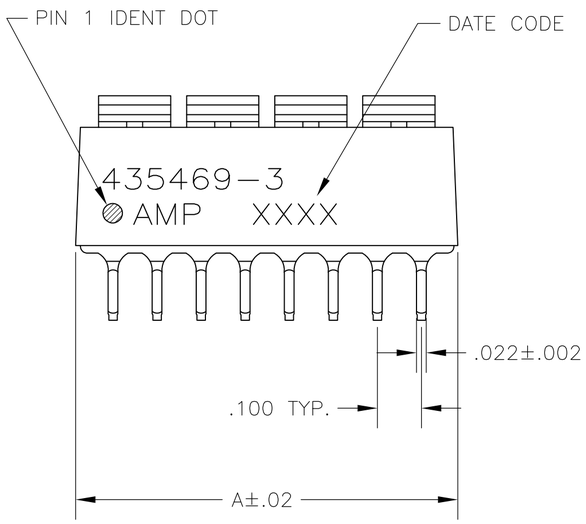

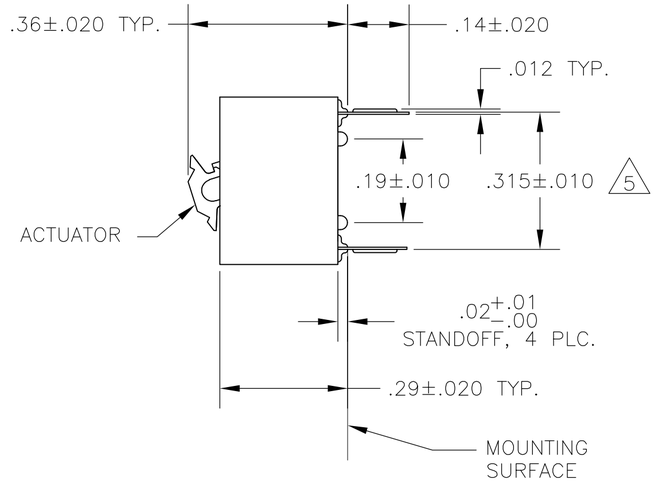

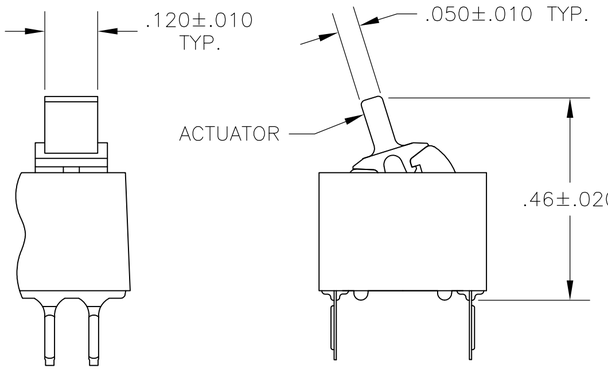

FIGURE 1
LEVER ACTUATOR SHOWN

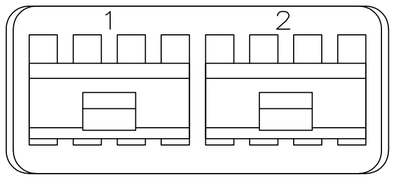

FIGURE 2

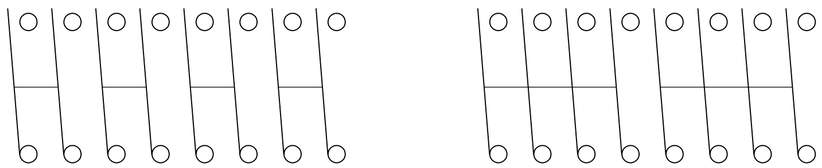

DPST 4PST

CONTACT ARRANGEMENT

1. FOR ADDITIONAL SPECIFICATIONS SEE AMP PRODUCT SPEC 108-7519.
2. SWITCH SHOWN IN OPEN POSITION.
3. ALL CHARACTERS AND ROCKERS ARE WHITE, HOUSING IS BLACK.
4. STAMPING WILL VARY ON 2 POSITION SIDES DUE TO SPACE RESTRICTIONS.

5. .315 DIMENSION APPLIES AT TERMINAL TIPS. TERMINALS ARE .300 +.010 -.000 AT MOUNTING SURFACE.

6. ACTUATOR COLOR IS BLUE.

7. ALL MATERIALS AND FINISHES SHALL COMPLY WITH EU DIRECTIVE 2002/95/EC OF 27JAN2003 (ROHS)

8. OBSOLETE PARTS: OBSOLETE CIS STREAMLINING PER D.RENAUD/D.SINISI

	ACTUATOR	TOP MARKING	A	SWITCH TYPE	NO OF POSN.	PART NO.
7 8 OBSOLETE	~~AS SHOWN~~	~~NONE~~	~~.28~~	~~DPST~~	~~2~~	~~8-435469-4~~
7	FIG 1	NONE	.48	4PST	4	8-435469-1
8 7 OBSOLETE	~~FIG 1~~	~~AS SHOWN~~	~~1.28~~	~~DPST~~	~~12~~	~~7-435469-6~~
	~~FIG 1~~	~~AS SHOWN~~	~~1.08~~	~~DPST~~	~~10~~	~~7-435469-5~~
	~~FIG 1~~	~~AS SHOWN~~	~~.88~~	~~DPST~~	~~8~~	~~7-435469-4~~
	~~FIG 1~~	~~AS SHOWN~~	~~.68~~	~~DPST~~	~~6~~	~~7-435469-3~~
	~~FIG 1~~	~~AS SHOWN~~	~~.48~~	~~DPST~~	~~4~~	~~7-435469-2~~
	~~FIG 1~~	~~NONE~~	~~.28~~	~~DPST~~	~~2~~	~~7-435469-1~~
	~~AS SHOWN~~	~~NONE~~	~~.28~~	~~DPST~~	~~2~~	~~5-435469-9~~
	~~AS SHOWN~~	~~NONE~~	~~.48~~	~~4PST~~	~~4~~	~~5-435469-7~~
	~~AS SHOWN~~	~~AS SHOWN~~	~~.88~~	~~DPST~~	~~8~~	~~5-435469-3~~
8 7 OBSOLETE	~~AS SHOWN~~	~~NONE~~	~~.28~~	~~DPST~~	~~2~~	~~3-435469-4~~
OBSOLETE	FIG 1	FIG 2	.88	4PST	8	3-435469-2
	FIG 1	NONE	.48	4PST	4	3-435469-1
8 OBSOLETE	~~FIG 1~~	~~AS SHOWN~~	~~1.28~~	~~DPST~~	~~12~~	~~2-435469-6~~
	~~FIG 1~~	~~AS SHOWN~~	~~1.08~~	~~DPST~~	~~10~~	~~2-435469-5~~
	~~FIG 1~~	~~AS SHOWN~~	~~.88~~	~~DPST~~	~~8~~	~~2-435469-4~~
	~~FIG 1~~	~~AS SHOWN~~	~~.68~~	~~DPST~~	~~6~~	~~2-435469-3~~
	~~FIG 1~~	~~AS SHOWN~~	~~.48~~	~~DPST~~	~~4~~	~~2-435469-2~~
	~~FIG 1~~	~~NONE~~	~~.28~~	~~DPST~~	~~2~~	~~2-435469-1~~
SUPERSEDED BY 2-435469-6	AS SHOWN	AS SHOWN	1.28	DPST	12	1-435469-0
8 OBSOLETE	~~AS SHOWN~~	~~NONE~~	~~.28~~	~~DPST~~	~~2~~	~~435469-9~~
	AS SHOWN	NONE	.48	4PST	4	435469-7
OBSOLETE	AS SHOWN	FIG 2	.88	4PST	8	435469-6
OBSOLETE	AS SHOWN	AS SHOWN	1.08	DPST	10	435469-4
8 OBSOLETE	~~AS SHOWN~~	~~AS SHOWN~~	~~.88~~	~~DPST~~	~~8~~	~~435469-3~~
OBSOLETE	AS SHOWN	AS SHOWN	.68	DPST	6	435469-2
OBSOLETE	AS SHOWN	AS SHOWN	.48	DPST	4	435469-1

435469

THIS DRAWING IS A CONTROLLED DOCUMENT.

DIMENSIONS: INCHES

TOLERANCES UNLESS OTHERWISE SPECIFIED:
0 PLC ± -
1 PLC ± -
2 PLC ± -
3 PLC ± .005
4 PLC ± -
ANGLES ± -

MATERIAL: HOUSING & ROCKER; POLYESTER. CONTACTS: BERYLLIUM COPPER

FINISH: CONTACTS: PLATED .000030 MIN. GOLD IN CONTACT AREA OVER .000050 MIN. NICKEL

DWN R.TALLEY 3-15-90
CHK R.MILLER 3-27-90
APVD H.LEITER 3-27-90
PRODUCT SPEC —
APPLICATION SPEC —
WEIGHT —

Tyco Electronics
Tyco Electronics Corporation
Harrisburg, Pa 17105-3608

NAME: SWITCH ASSY, DIP, TYPE C, 7000 SERIES, DPST & 4PST

SIZE A2 | CAGE CODE 00779 | DRAWING NO C-435469 | RESTRICTED TO —

CUSTOMER DRAWING | SCALE 4:1 | SHEET 1 OF 1 | REV AE1