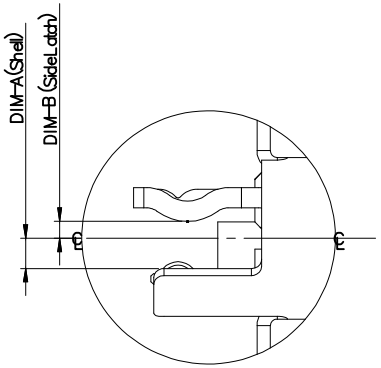

detail H

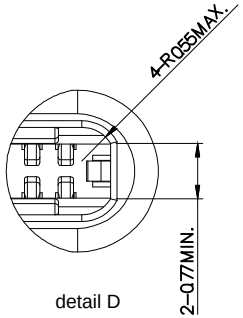

detail D

SPECIFICATION
MATERIAL
Insulator: Thermoplastic,Black
Contacts: Copper
Shell: Steel
CONTACT PLATING
Underplate: 80u"~160u" Nickel
Contact area: 30u''Pd Ni+2u" Selective gold,
Solder tails area: 100u"~150u" Tin (Lead Free)
ELECTRICAL
Operation voltage: 5 V
Current rating: 3 Amps max.
Insulation resistance: 100 Mohms min @ 100 VDC
Dielectric withstanding voltage: 100 VAC / minute
Temperature range: -25°C TO +105°C
Mating cycles: 10,000 insertions

Dim-X=0.7mm
AUSB1-DMN-PTR1:800 pcs/reel,5 reels/carton
AUSB1-DMN-PTP1:160 pcs/tray,20 trays/carton

Dim-X=0.5mm
AUSB1-DMN-PTR2:800 pcs/reel,5 reels/carton
AUSB1-DMN-PTP2:160 pcs/tray,20 trays/carton

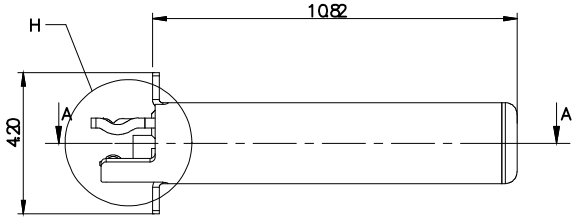

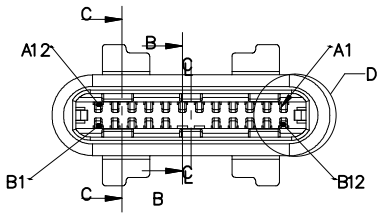

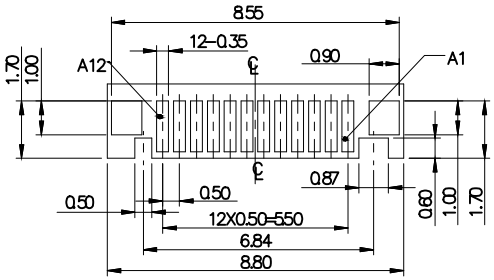

TOP Side

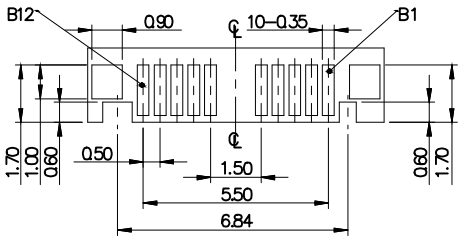

Bottom Side

Recomanded PCB LAYOUT
TOLANCE ±0.05
PCB Thickness=0.80mm

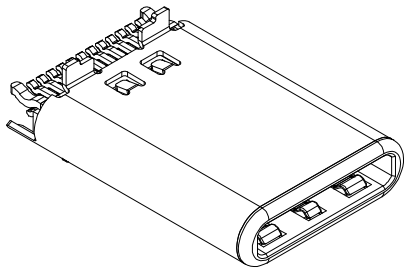

RoHS compliant
Unit: mm

Scale	Free
TOLERANCE	
X.	±0.30
X.X	±0.20
X.XX	±0.10
DIM	TOL
X.°	±2°
Angle	TOL

Id.	Modification	Date	Name
0	Drawn	28.07.2015	Joanna

	Date	Name
Drawn	28.07.2015	Joanna
Approved	28.07.2015	Joanna

ASSMANN wsw components

Customer-No.

ASSMANN WSW-No.
AUSB1-DMN-PTXX

Drawing-No.
ASS 6937 CO

rev00

Replace

Sheet 1/3

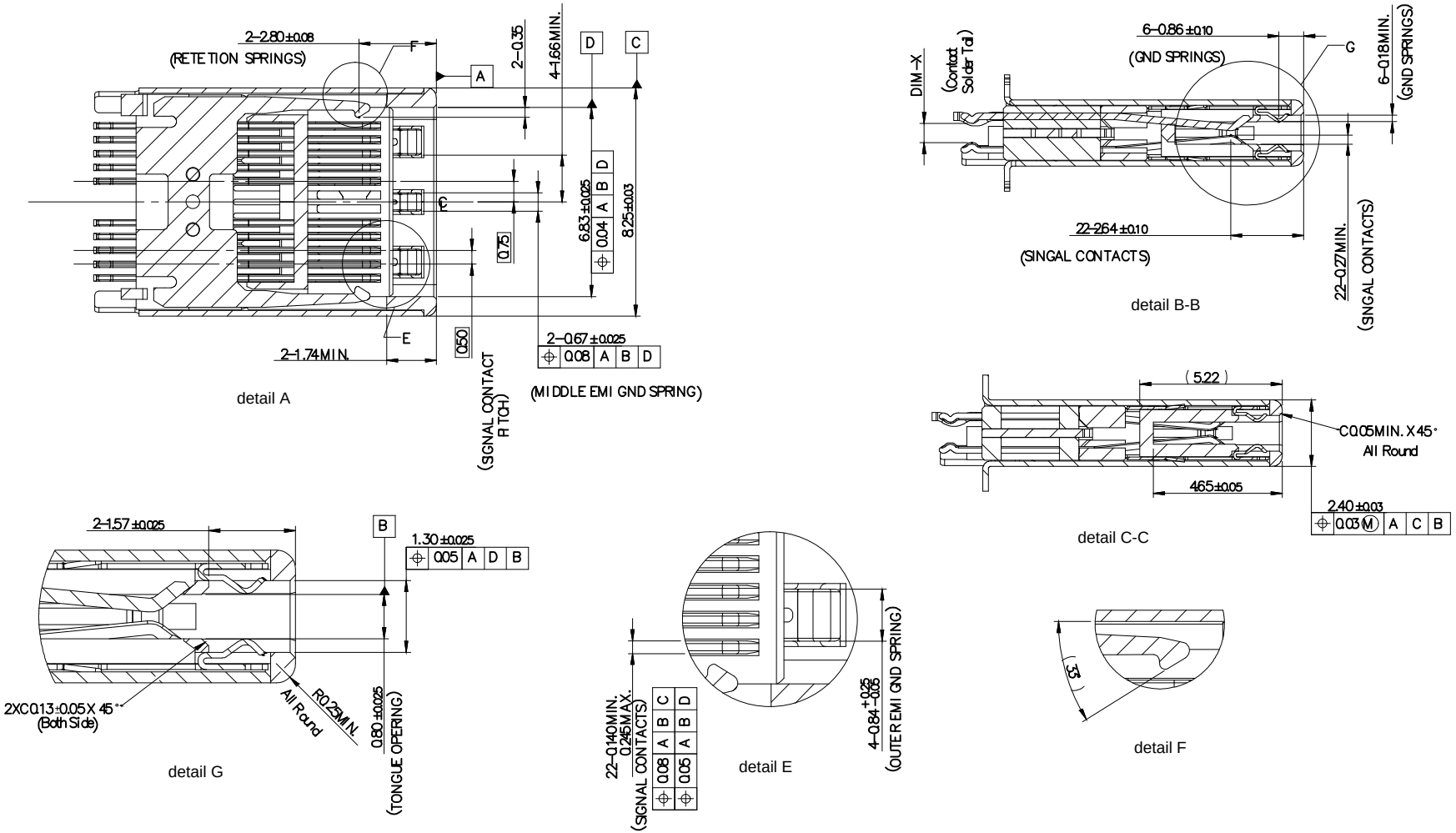

RoHS compliant

Unit: mm

Scale	Free
TOLERANCE	
X.	±0.30
X.X	±0.20
X.XX	±0.10
DIM	TOL
X.°	±2°
Angle	TOL

Id.	Modification	Date	Name
0	Drawn	28.07.2015	Joanna

	Date	Name
Drawn	28.07.2015	Joanna
Approved	28.07.2015	Joanna

ASSMANN WSW components

Customer-No.

ASSMANN WSW-No.
AUSB1-DMN-PTXX

Drawing-No.
ASS 6937 CO

rev00

Replace

Sheet
2/3

USB TYPE-C Plug Pin Assignments

Pin Number	Signal Name	Pin Number	Signal Name
A1	GND	B12	GND
A2	SSTXp1	B11	SSRXp1
A3	SSTXn1	B10	SSRXn1
A4	VBUS	B9	VBUS
A5	CC1	B8	SBU2
A6	Dp1	B7	NA
A7	Dn1	B6	NA
A8	SBU1	B5	CC2
A9	VBUS	B4	VBUS
A10	SSRXn2	B3	SSTXn2
A11	SSRXp2	B2	SSTXp2
A12	GND	B1	GND

RoHS compliant
Unit: mm

Scale	Free
TOLERANCE	
X.	±0.30
X.X	±0.20
X.XX	±0.10
DIM	TOL
X.°	±2°
Angle	TOL

Id.	Modification	Date	Name
0	Drawn	28.07.2015	Joanna

	Date	Name
Drawn	28.07.2015	Joanna
Approved	28.07.2015	Joanna

ASSMANN WSW components

Customer-No.

ASSMANN WSW-No.
AUSB1-DMN-PTXX

Drawing-No.
ASS 6937 CO

rev00

Replace

Sheet 3/3