1-1437514-3 Product Details

Live Product Chat

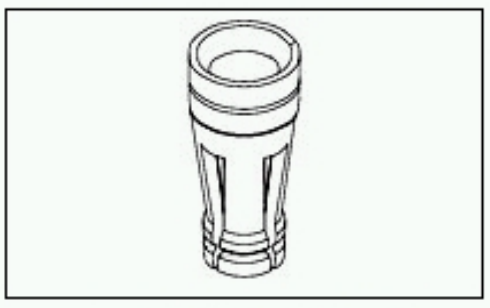

1-1437514-3

TE Part Number: 1-1437514-3
Active
Add to Part List

DIP Sockets

Always EU RoHS/ELV Compliant (Statement of Compliance)

Product Highlights:
- DIP Socket
- Number of Positions = 1
- Row-to-Row Spacing = 7.62 mm
- Thru Hole
- Mount Style = Vertical

View all Features | Find Similar Products

Quick Links
- Check Pricing & Availability
- Search for Tooling
- Product Feature Selector
- Contact Us About This Product
- Request Samples NEW!

Documentation & Additional Information

Product Drawings:
- None Available

Catalog Pages/Data Sheets:
- None Available

Product Specifications:
- AUGAT* HOLTITE* Sockets (PDF, English)

Application Specifications:
- AUGAT HOLTITE Sockets (PDF, English)

Instruction Sheets:
- None Available

CAD Files:
- None Available

List all Documents

Additional Information:
- Product Line Information

Additional Product Images:
- Product Photo

Related Products:
- Tooling

Product Features (Please use the Product Drawing for all design activity)

Product Type Features:
- Product Type = DIP Socket
- Number of Positions = 1
- Profile = Zero
- Frame Style = Film Carrier
- Leg Style = Straight
- Proprietary Name = HOLTITE
- Sleeve Finish = Gold

Electrical Characteristics:
- Contact Resistance (mΩ) = 10
- Contact Rating = 3A

Termination Related Features:
- Termination (Solder) Post Length (mm [in]) = 3.18 [0.125]

Body Related Features:
- Row-to-Row Spacing (mm [in]) = 7.62 [0.300]
- Mount Style = Vertical
- Centerline (mm [in]) = 2.54 [0.100]

Contact Related Features:
- Contact Mount = Thru Hole
- Contact Material = Beryllium Copper
- Contact Mating Area Plating Material = Gold
- Contact Style = Screw Machine
- Mating Contact Type = Four-Fingered

Housing Related Features:
- Number of Patterns Per Reel = 1
- Carrier Strip Material = Mylar

Configuration Related Features:
- Height Above PC Board (mm [in]) = 0.00 [0.000]

Industry Standards:
- RoHS/ELV Compliance = RoHS compliant, ELV compliant
- Lead Free Solder Processes = Not relevant for lead free process
- RoHS/ELV Compliance History = Always was RoHS compliant

Conditions for Usage:
- Temperature Range (°C) = -55 – +125

Packaging Related Features:
- Packaging Method = Reel
- Packaging Quantity = 5,000

Other:
- Brand = AMP

© 2008 Tyco Electronics Corporation All Rights Reserved