RoHS

SHHPS (Stainless Steel)
SHHPSK (Stainless Steel, Brushed Finish)
SHHPT (Steel)

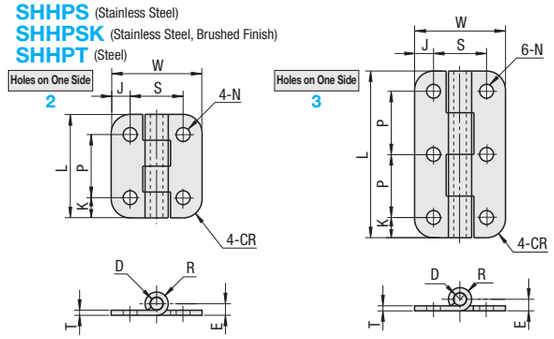

The hinge nuts on **P.1115** are recommended when mating to panels, etc.

Type	Material	Surface Treatment
SHHPS	316 Stainless Steel	-
SHHPSK	304 Stainless Steel	Brushed Finish
SHHPT	Low Carbon Steel / Low Carbon Steel or Low Carbon Steel	Chrome Plating

Part Number Type	No.	Holes on One Side	*Allowable Load kg	*Allowable Load N	Mass g	L	W	K	P	J	S	N	T	E	R	CR	D	SHHPS Unit Price 1~8 pc(s).	SHHPS Volume Discount Rate 9~	SHHPSK Unit Price 1~8 pc(s).	SHHPSK Volume Discount Rate 9~
SHHPS SHHPSK	5	2	9	88	43	41	36	8	25	7.5	21	5.5	2	4.6	4.6	7.5	5				
		3	11	108	70	66															
	6	2	12	117	60	48	48	9	30	8	32	6.5									
		3	15	147	98	78															
	8	2	25	245	130	59	62	11	37	10	42		3	5.6	5.6	10					
		3	38	372	230	96								6.1	6.1		6				
	845	2	30	294	190	70	80	13.5	43	16.5	47			5.6	5.6		5			-	-
		3	40	392	325	113								6.1	6.1		6			-	-

*The allowable load is the value when 2 pieces are used.

Part Number Type	No.	Holes on One Side	*Allowable Load kg	*Allowable Load N	Mass g	L	W	K	P	J	S	N	T	E	R	CR	D	Unit Price 1~8 pc(s).	Volume Discount Rate 9~
SHHPT	5	2	9	88	36	41	36	8	25	7.5	21	5.5	2	4.6	4.6	4	5		
		3	11	108	59	66													
	6	2	12	117	50	48	48	9	30	8	32	6.5							
		3	15	147	83	78													
	8	2	25	245	124	59	62	11	37	10	42		3.2	6.5	6.5	5	6		
		3	38	372	207	96													
	845	2	30	294	181	70	80	13.5	43	16.5	47								
		3	40	392	298	113													

*The allowable load is the value when 2 pieces are used.

RoHS

SHHPSD (Stainless Steel, Countersink)

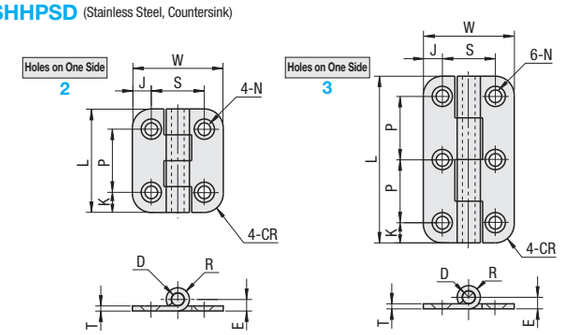

Material: 304 Stainless Steel

Part Number Type	No.	Holes on One Side	*Allowable Load kg	*Allowable Load N	Mass g	L	W	K	P	J	S	N Through	N Countersink	T	E	R	CR	D	Unit Price 1~8 pc(s).	Volume Discount Rate 9~
SHHPSD	5	2	9	88	34	41	36	8	25	7.5	21	5.5	8.6 (For M4 Screw)	2	4.6	4.6	4	5		
		3	11	108	56	66														
	6	2	12	117	49	48	48	9	30	8	32									
		3	15	147	80	78														
	8	2	25	245	111	59	62	11	37	10	42	6.5	10.6 (For M5 Screw)	3	6.1	6.1	5	6		
		3	38	372	185	96														
	845	2	30	294	162	70	80	13.5	43	16.5	47									
		3	40	392	266	113														

*The allowable load is the value when 2 pieces are used.

Ordering Example

Part Number	-	Holes on One Side
SHHPS6	-	2
SHHPSD6	-	3

Days to Ship

Configure Online

Flat Hinges RoHS

HHS

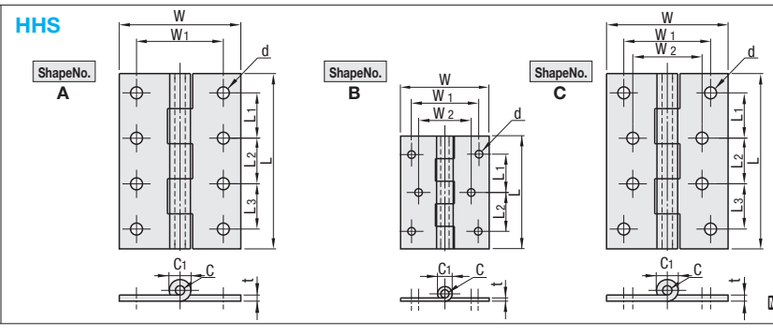

Material: 304 Stainless Steel

Part Number Type	No.	L	Shape No.	W	W1	W2	L1	L2	L3	C	C1	t	d	Division	*Allowable Load (N)	Weight (g)	Unit Price 1~19 pc(s).	Volume Discount Rate 20~99	100~
HHS	25	25	A	20	12	-	16	-	-	2	3.8	0.8	3.4	3	9.8	6			
	30	30					22									7			
	40	40		30	22		28			3	6.4	1.5			58.8	12			
	50	50					36								68.6	16			
	65A	65		50	30		23	23		4	8.5	2	4.5	5	127.4	25			
	65		B		36	30	22	22											
	75A	75	A		30	-	27	27					5.5		147	46			
	75		B		36	30	26	26											
	90A	90	A	60	38	-	35	35		6	12.7	3	6.6		245	68			
	90		B		46	36	34	34											
	100A	100	A		38	-	26	26	26						294	100			
	100		C		46	36													

*The allowable load is the value when 2 pieces are used.

Flat Hinges RoHS

HHKS

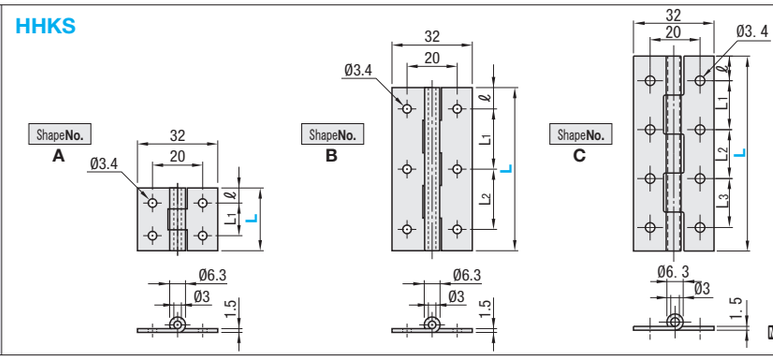

Material: 304 Stainless Steel

Part Number Type	L	Shape No.	ℓ	L1	L2	L3	Division	*Allowable Load (N)	Weight (g)	Unit Price 1~19 pc(s).	Volume Discount Rate 20~99	100~
HHKS	25	A	6	13	-	-	3	29.4	13			
	30		7	16	-	-		39.2	16			
	40		8	24	-	-		58.8	21			
	50		10	30	-	-		68.6	26			
	65	B	8.5	24	24	-	5	98.0	34			
	75		9.5	28	28	-		107.8	39			
	90		10	35	35	-		127.4	47			
	100	C	11	26	26	26		147.0	52			

*The allowable load is the value when 2 pieces are used.

Hinge Nuts RoHS

HHST
HHKST

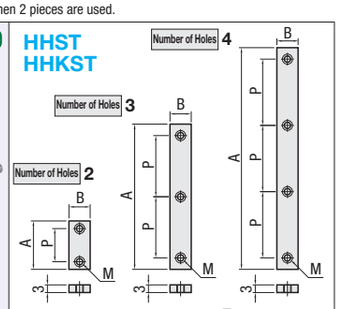

Material: 304 Stainless Steel

Part Number Type	No.	Number of Holes	B	A	P	M	Applicable Hinge	Unit Price 1~9 pc(s).	Volume Discount Rate 10~
HHST	25	2	6	22	16	3	HHS25		
	30		6	28	22	3	HHS30		
	40		7	36	28	3	HHS40		
	50		7	45	36	4	HHS50		
	65	3	9	55	23	4	HHS65A		
	75		11	65	27	5	HHS75A		
	90		12	82	35	6	HHS90A		
	100	4	12	90	26	6	HHS100A		
HHKST	25	2	6	19	13	3	HHKS25		
	30		6	22	16	3	HHKS30		
	40		6	32	24	3	HHKS40		
	50		6	39	30	3	HHKS50		
	65	3	6	57	24	3	HHKS65		
	75		6	65	28	3	HHKS75		
	90		6	79	35	3	HHKS90		
	100	4	6	87	26	3	HHKS100		

Example

Hinge Nuts

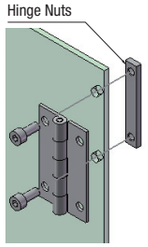

Ordering Example

Part Number
HHS100
HHKS100
HHST30
HHKST75

Days to Ship

Configure Online