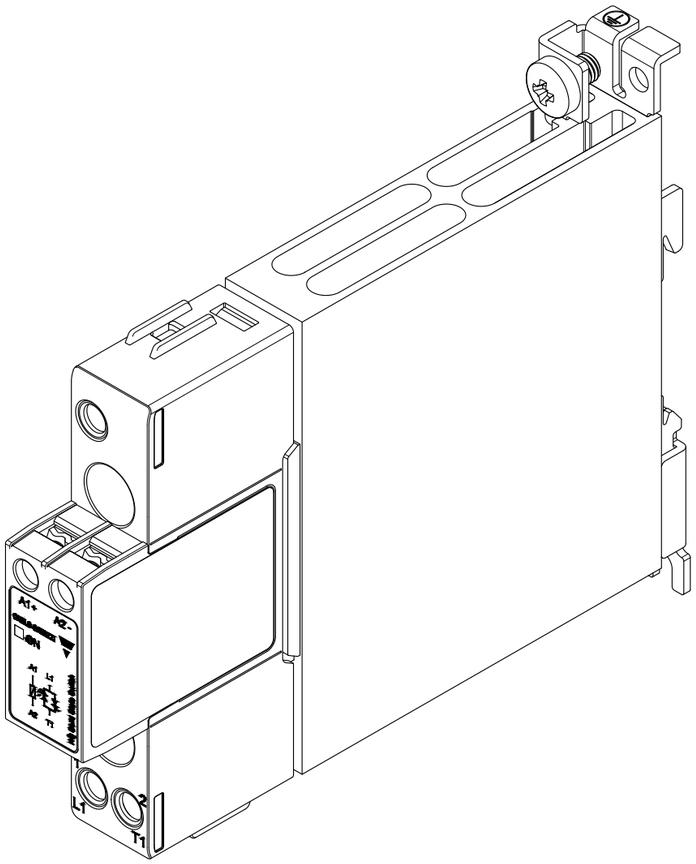

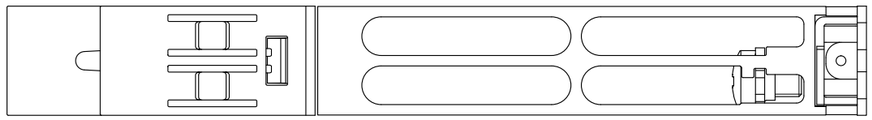

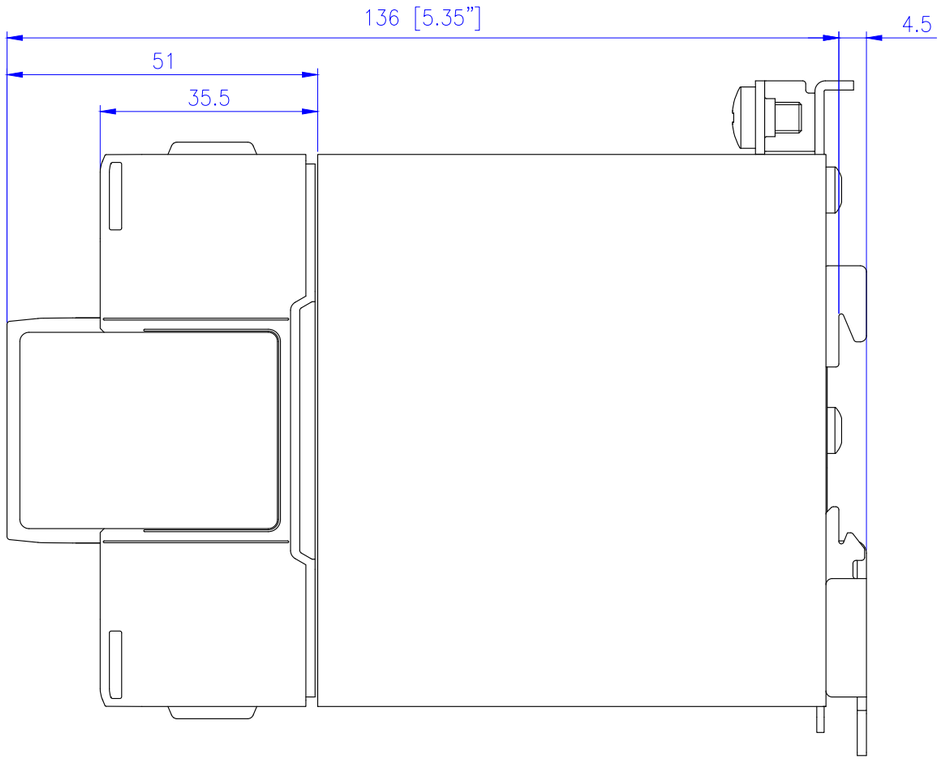

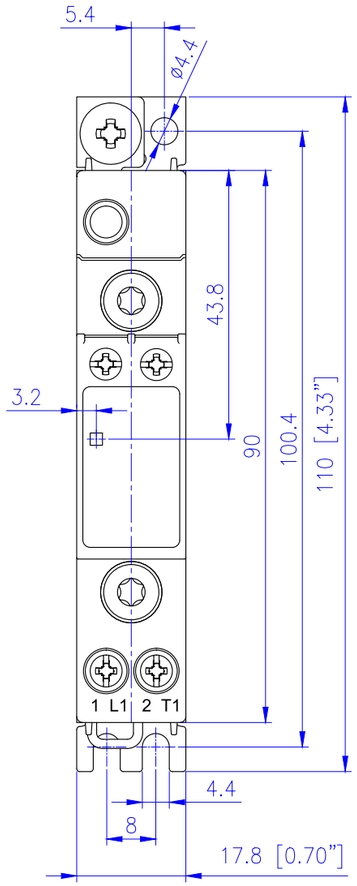

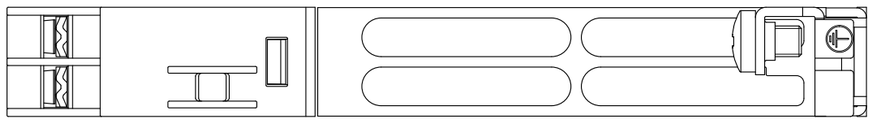

CARLO GAVAZZI

Copyright belongs to
CARLO GAVAZZI LIMITED, Malta.
Use or reproduction of this document or any part of it is not allowed without a written permission

All Dimensions in mm
Unless Otherwise Noted Tolerance is ±0.5mm

RG17.5 U-Type PM - LT Terminals 6mm² Box Clamp, ACDC Module - A1A2 Terminals - Screw Type Heatsink 17.5x83x90mm, Metal DIN Rail Adapter

THIS DRAWING IS PROVIDED FOR REFERENCE ONLY AND IS SUBJECT TO CHANGE WITHOUT NOTICE

For Support Refer To:
www.carlogavazzi.com

Date: 14 SEP 2012

CGI0890-01