FCA-210 -0917M Product Details

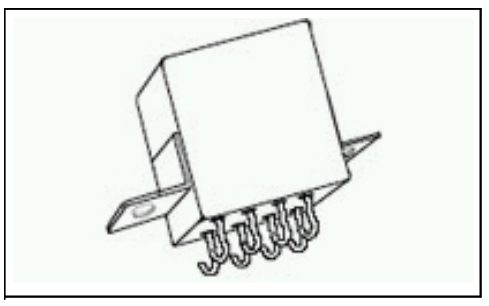

FCA-210 -0917M
(M83536/9 -017M)
Active

Military/Aerospace Mid -Range Relays

Not EU RoHS or ELV Compliant

Product Highlights:

- FCA 10-25 Amp Relay Series
- DC Actuating System
- Coil Voltage = 12 VDC
- Contact Arrangement = 2 Form C, DPDT, 2 C/O
- Current Rating = 10 Amps.

View all Features | Find Similar Products

Quick Links

Check Pricing & Availability
Search for Tooling
Product Feature Selector
Contact Us About This Product

Documentation & Additional Information

Product Drawings:
- MSD RELAY (PDF, English)

Catalog Pages/Data Sheets:
- None Available

Product Specifications:
- None Available

Application Specifications:
- None Available

Instruction Sheets:
- None Available

CAD Files:
- None Available

List all Documents

Additional Information:
- Product Line Information

Related Products:
- Tooling

Product Features (Please use the Product Drawing for all design activity)

Product Type Features:
- Terminal Type = Solder Hook

Electrical Characteristics:
- Actuating System = DC
- Coil Voltage (VDC) = 12
- Current Rating (Amps.) = 10

Termination Related Features:
- Terminal Plating = Tin -Lead
- Auxiliary Contacts = Without

Body Related Features:
- Series = FCA 10 -25 Amp Relay
- Mount Type = Side Mount

Configuration Related Features:
- Contact Arrangement = 2 Form C, DPDT, 2 C/O
- Coil Suppression Diode = Without
- Coil Magnetic System = Polarized, Monostable

Industry Standards:
- Government/Industry Qualification = No
- Government/Industry Part Number = M83536/9 -017M
- RoHS/ELV Compliance = Not ELV/RoHS compliant
- Lead Free Solder Processes = Not suitable for lead free processing

Other:
- Brand = CII

© 2008 Tyco Electronics Corporation All Rights Reserved