onlinecomponents.com
THE ONLINE DISTRIBUTOR OF ELECTRONIC COMPONENTS

PACKAGE OUTLINE

DO- 4 (DO-203AA)

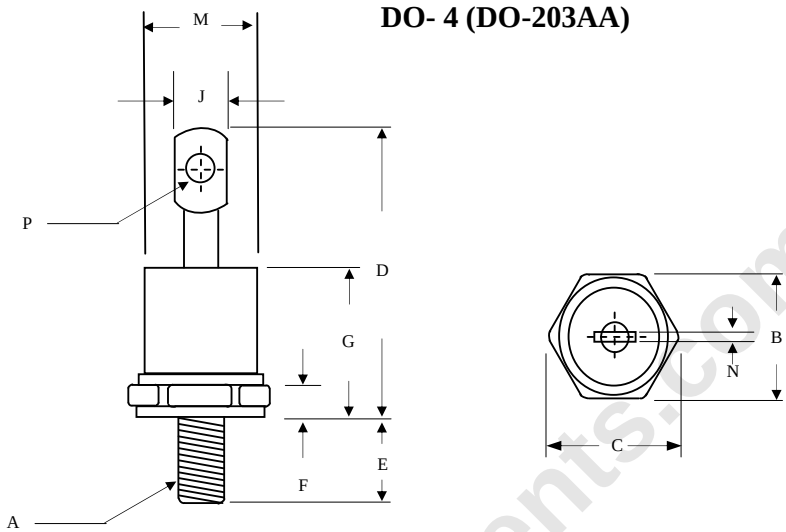

	Inches		Millimeters	
	Min	Max	Min	Max
A	10-32 UNF			
B	0.424	0.437	10.77	11.10
C	-----	0.505	-----	12.82
D	------	0.800	-----	20.30
E	0.453	0.492	11.50	12.50
F	0.114	0.140	2.90	3.50
G	-----	0.405	-----	10.29
J	-----	0.216	-----	5.50
M	-----	φ 0.302	-----	φ 7.68
N	0.031	0.045	0.80	1.15
P	0.070	0.79	1.80	2.00

Dimensions in inches and (millimeters)

onlinecomponents.com