onlinecomponents.com
THE ONLINE DISTRIBUTOR OF ELECTRONIC COMPONENTS

A

PACKAGE OUTLINE

DO-8 (DO-205AA)

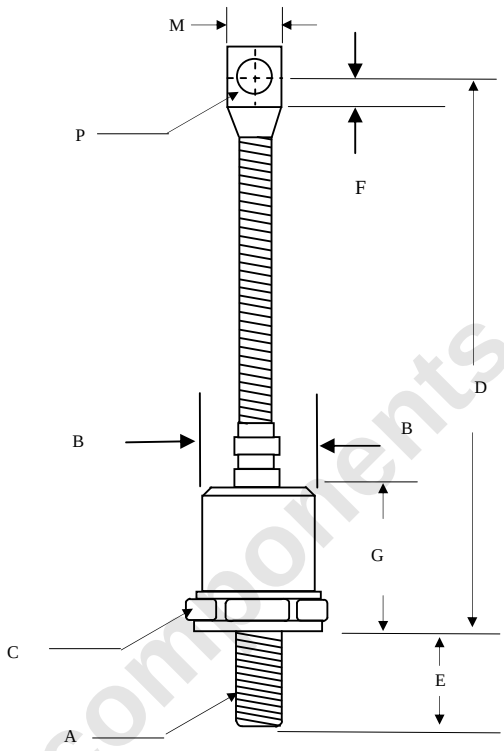

	Inches		Millimeters	
	Min	Max	Min	Max
A	3/8-24 UNF			
B	-----	φ 0.930	-----	φ 23.5
C	1.050	1.060	26.67	26.92
D	4.300	4.700	109.22	119.38
E	-----	0.690	-----	17.00
F	0.260	-----	6.50	-----
G	-----	0.940	-----	24.00
J	-----	-----	-----	-----
M	-----	0.600	-----	15.23
N	-----	-----	-----	-----
P	0.276	0.286	7.010	7.260

Dimensions in inches and (millimeters)

onlinecomponents.com