177-711

SHELL SIZE	GLENAIR P/N	GENDER	A ±.010	B ±.010	(C)	D	E	F	G
9	177-711-09P	PLUG	.775	.298	.565	.450	.324	.340	.214
15	177-711-15P	PLUG	.925	.298	.715	.600	.324	.490	.214
21	177-711-21P	PLUG	1.075	.298	.865	.750	.324	.640	.214
25	177-711-25P	PLUG	1.175	.298	.965	.850	.324	.740	.214
31	177-711-31P	PLUG	1.325	.298	1.115	1.000	.324	.890	.214
37	177-711-37P	PLUG	1.475	.298	1.265	1.150	.324	1.040	.214
51	177-711-51P	PLUG	1.425	.341	1.215	1.100	.367	.990	.257
100	177-711-100P	PLUG	2.160	.384	1.800	1.495	.427	1.385	.307
9	177-711-09S	RECEPTACLE	.775	.298	.565	.450	.324	.340	.214
15	177-711-15S	RECEPTACLE	.925	.298	.715	.600	.324	.490	.214
21	177-711-21S	RECEPTACLE	1.075	.298	.865	.750	.324	.640	.214
25	177-711-25S	RECEPTACLE	1.175	.298	.965	.850	.324	.740	.214
31	177-711-31S	RECEPTACLE	1.325	.298	1.115	1.000	.324	.890	.214
37	177-711-37S	RECEPTACLE	1.475	.298	1.265	1.150	.324	1.040	.214
51	177-711-51S	RECEPTACLE	1.425	.341	1.215	1.100	.367	.990	.257
100	177-711-100S	RECEPTACLE	2.160	.384	1.800	1.495	.427	1.385	.307

REVISIONS			
SYM.	DESCRIPTION	DATE	APPROVED
A	PRODUCTION RELEASE	09/18/08	JAS

PART NUMBER DEVELOPMENT

177-711-XXX X-X

BASIC P/N

SHELL SIZE
09 = 9 POSTION
15 = 15 POSITION
21 = 21 POSITION
25 = 25 POSITION
31 = 31 POSITION
37 = 37 POSITION
51 = 51 POSITION
100 = 100 POSITION

GENDER
P = PLUG (PIN)
S = RECEPTACLE (SOCKET)

SHELL PLATING
02 = NICKEL

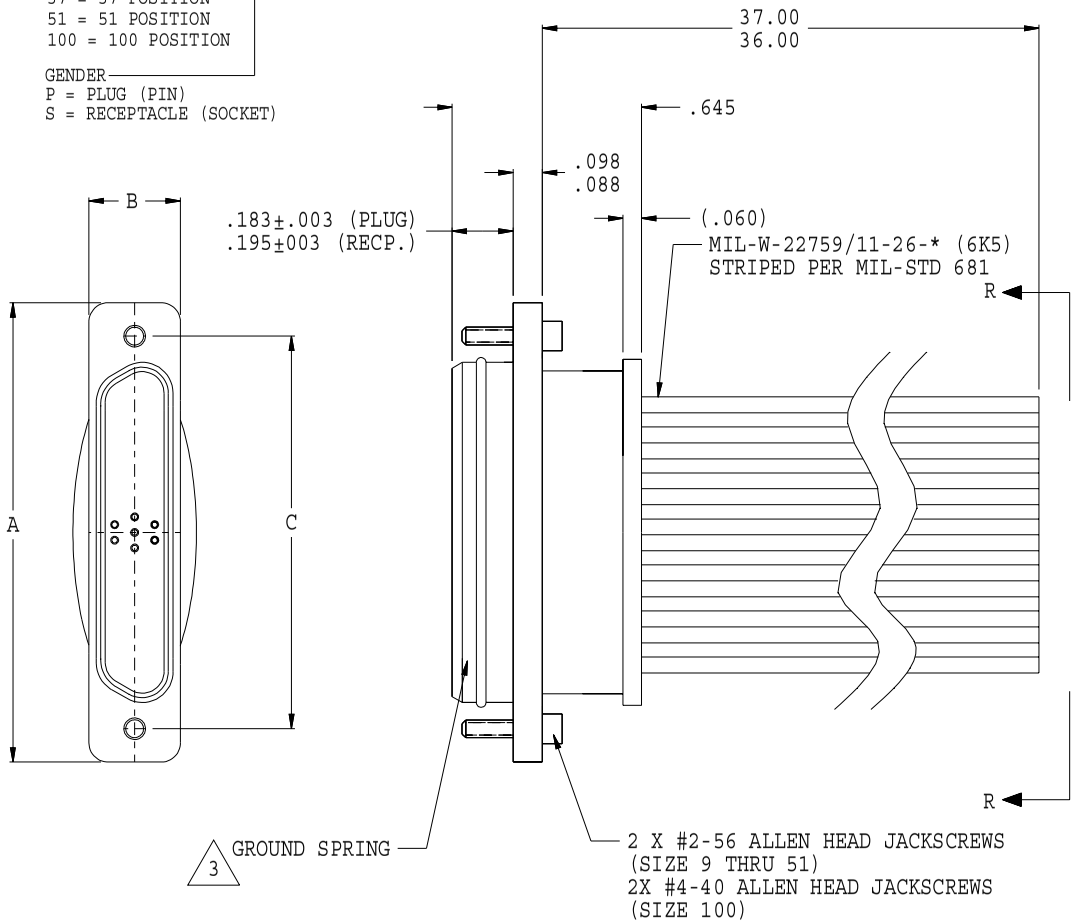

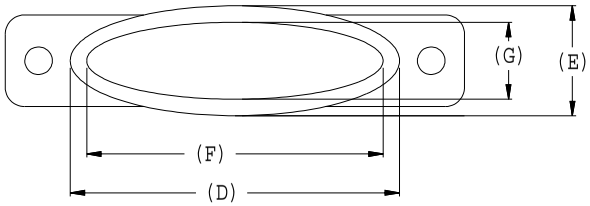

VIEW R-R

6. INTERFACE DIMENSIONS IAW MIL-DTL-83513.

5. PERFORMANCE IAW MIL-DTL-83513.

4. 177-711 USES A CANTED COIL GROUND SPRING AND IS DESIGNED AS A REPLACEMENT TO 177-418.

3. PLUG ASSEMBLIES SUPPLIED WITH EMI GROUND SPRING INSTALLED.

2. MATERIAL/FINISH:
SHELL - AL ALLOY/SEE PART NUMBER DEVELOPMENT
MOUNTING HARDWARE - SST/PASSIVATED
INSULATOR - LCP/N/A
CONTACTS - COPPER ALLOY/GOLD PLATED
GROUND SPRING - STAINLESS STEEL/GOLD PLATED

1. ASSEMBLY TO BE IDENTIFIED WITH GLENAIR'S NAME, PART NO., DATE CODE AND PIN 1 IDENTIFICATION.

NOTES:

UNLESS OTHERWISE SPECIFIED
DIMENSIONS ARE IN INCHES
TOLERANCES:
FRACTIONS ± 1/16
DECIMALS .XX ±.03
.XXX ±.015
ANGLES ± 1°

DO NOT SCALE THIS DRAWING

B/F 04C4360 | P/C

DRAWN	JAS	12/21/06
CHECK	J.L.T.	12/21/06
ENGR	JAS	12/21/06

D. Brown
APPROVED

D. Brown
APPROVED

RELEASE DATE
ORIGINAL RELEASE DATE

NON REPARABLE COMMERCIAL ITEM

GLENAIR, INC. CAD 1997©
1211 AIR WAY - GLENDALE - CALIFORNIA 91201

ASSEMBLY, MICRO-D CABLE
SIZE 9-100 BANDED SHELL

CODE IDENT. NO.	SIZE		REV.
06324	C	177-711	A

SCALE N/A | WEIGHT N/A | SHEET 1 OF 1