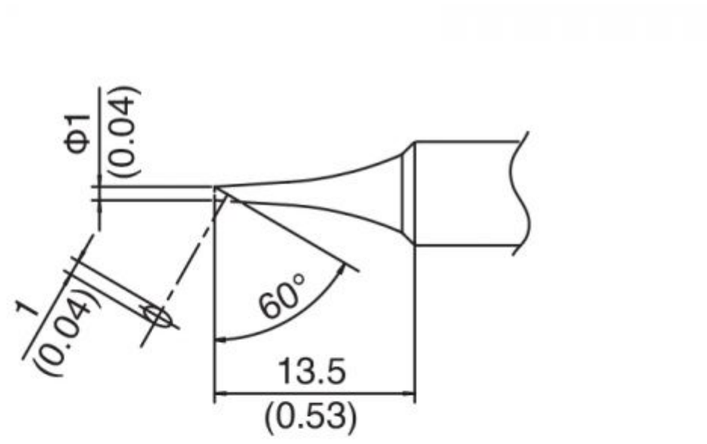

Availability: **In stock** Part Number **T18-C1**

T18-C1 Bevel Tip

1MM/60° Bevel

1C FX-600,FX-8801,907/900M/913

T18 Series, Bevel Tip.

1 ADD TO CART

FEATURES & BENEFITS SPECIFICATIONS

NOTE: This tip replaces part number 900M-T-1C

T18-C1 Tip

This tip is used with the following Hakko Soldering Stations and Systems:

Hakko FX-888 Soldering Station
Hakko 913 ESD Safe Fume Extraction Iron (Requires a Fume Extraction System)
Hakko 907 Soldering Iron
Hakko 907-ESD Soldering Iron
Hakko 900M Soldering Iron
Hakko 900M-ESD Soldering Iron
Hakko 928 Soldering Station
Hakko 936 Soldering Station
Hakko 936-ESD Soldering Station
Hakko 937 Soldering Station
Hakko 703 Soldering Station

Tip Shape: Bevel

© 2020 American Hakko Products, Inc.