Large Rainproof Ventilator

- Designed to equalize internal / external pressure and temperature
- Ventilators assist in condensation prevention by allowing enclosures to breathe
  Suitable for most types of metallic and non-metallic enclosures
- Molded in corrosion resistant UV stabilized polycarbonate plastic, finish RAL7035 Light Gray
- Gasket protection to enclosure wall
- Mount to enclosure wall thickness up to .16” with standard screws
- Internal vent channel & grille reduces insect intrusion
- Package quantity 1

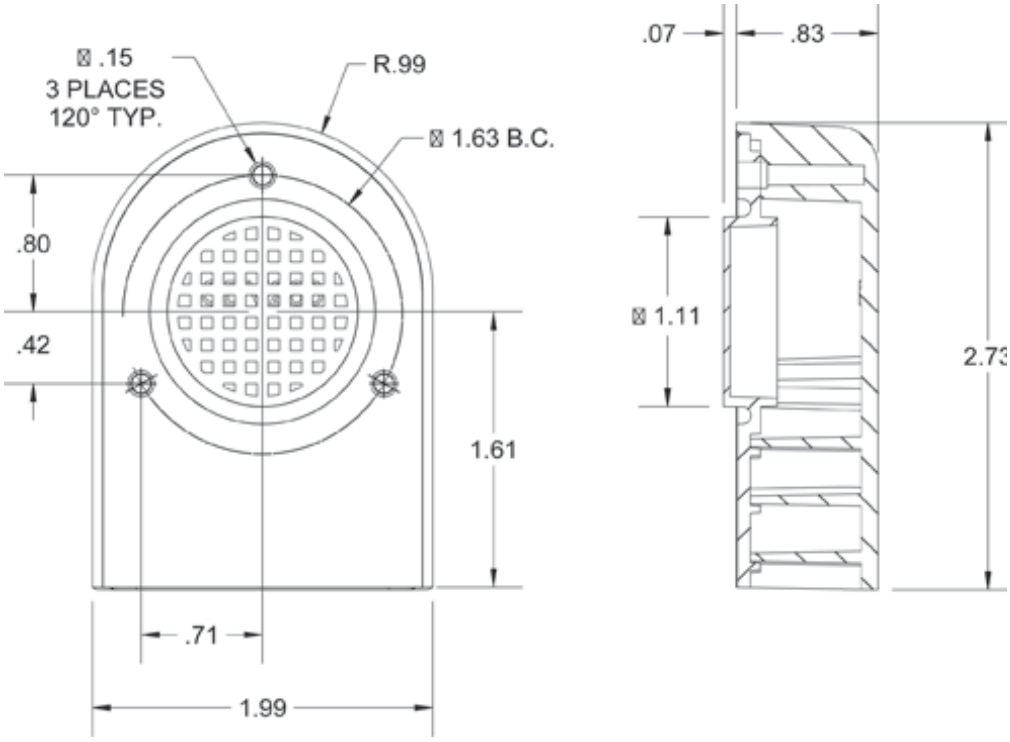

Part No.	SDV280-1

Data subject to change without notice

© 2014. Hammond Manufacturing Ltd. All rights reserved.