Customer Information Sheet

DRAWING No.: G125-FIXXXXX-XXX-L	IF IN DOUBT - ASK	©	NOT TO SCALE	THIRD ANGLE PROJECTION	ALL DIMENSIONS IN mm

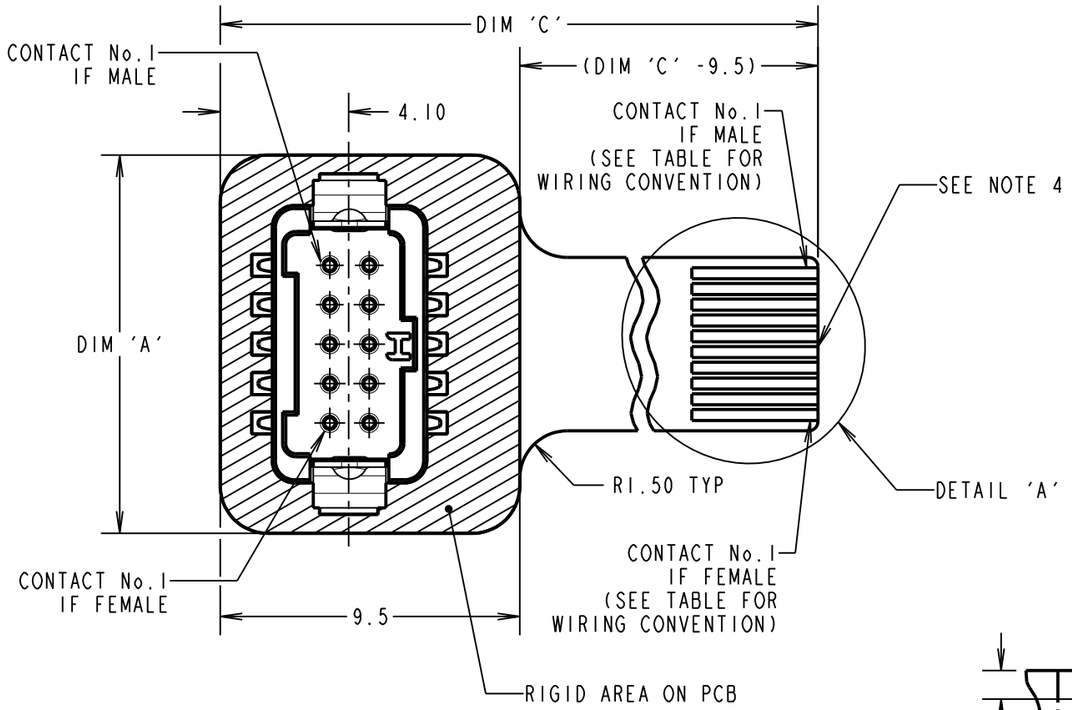

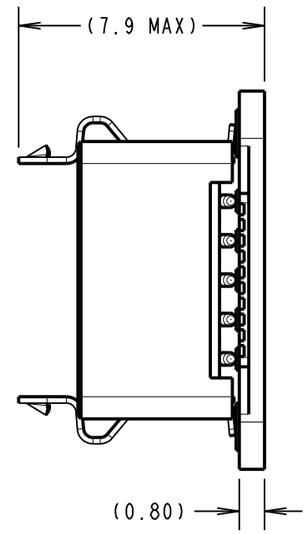

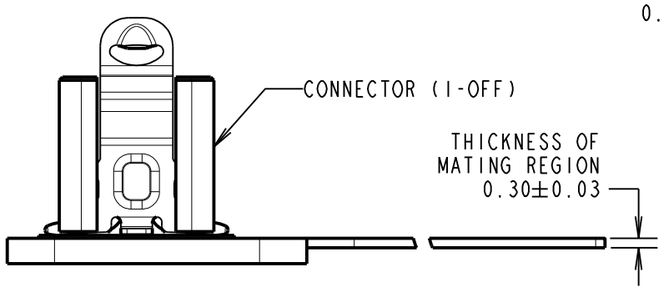

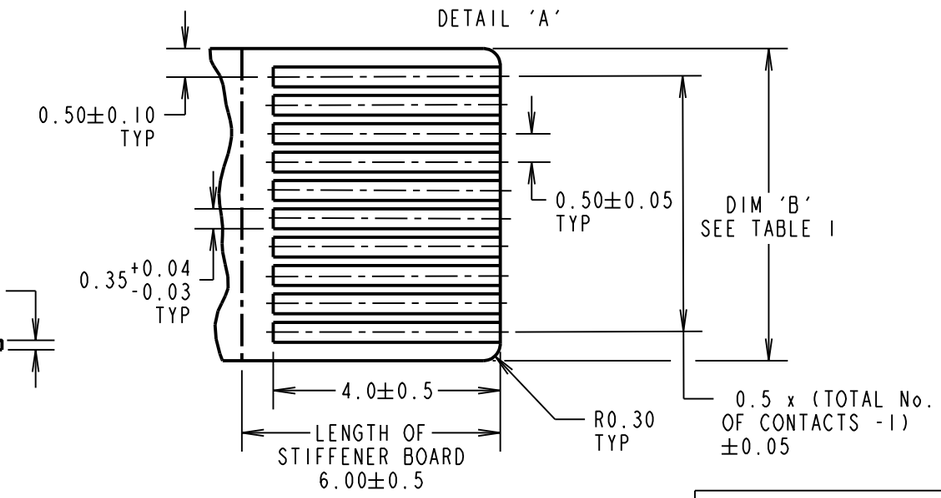

ORDER CODE:

G125-FIXXXXX-XXX-L

CONNECTOR 1 PART No.:
MS1 = G125-MS1XX05L3P
FS1 = G125-FS1XX05L0P

TOTAL No. OF CONTACTS:
06, 10, 12, 16, 20, 26, 34, 50.

DIM 'C' (PCB LENGTH):
999 = 999mm MAX.

TABLE 2	
ZIF PIN OUT No.	CONNECTOR PIN OUT No.
1	1
2	6
3	2
4	7
5	3
6	8
7	4
8	9
9	5
10	10
BASED ON G125-MF11005L3-0075L SHOWN. CONVENTION CONTINUES AS FOLLOWS:	
ALL FIRST ROW CONTACTS: CONTACT X TO CONTACT ((TOTAL/2)+X) (WHERE X IS CONTACT POSITION)	
ALL SECOND ROW CONTACTS: CONTACT Y TO CONTACT (Y-(TOTAL/2)) (WHERE Y IS CONTACT POSITION)	
'FIRST ROW' POSITIONS ON CONTACT No.1 ROW	
'SECOND ROW' POSITIONS OPPOSITE CONTACT No.1 ROW	

NOTES:
1. FOR COMPLETE CONNECTOR SPECIFICATION, SEE COMPONENT SPECIFICATION C125XX (LATEST ISSUE).
2. CONNECTOR SHOWN IS FOR REFERENCE ONLY. SEE TABLE AND ORDER CODE FOR POSSIBLE CONFIGURATIONS.
3. PCB ASSEMBLIES PACKED INDIVIDUALLY IN ANTI-STATIC BAGS.
4. 0.5mm PITCH CONNECTION DESIGNED FOR USED WITH ZIF/FPC/FFC.

FLEX PCB SPECIFICATION:

-BOARD CONSTRUCTION:
- SINGLE LAYER FLEXIBLE PCB
- 50µm BASE POLYIMIDE
- 35µm (1oz) COPPER CLAD TO IPC-4204/1
- 50µm BONDED COVERLAY TO IPC-4203/1
- 0.8mm HTG FR4 TO IPC-4101/126 LOCALLY RIGIDISED IN CONNECTOR AREAS

-SURFACE FINISH:
- ENIG TO IPC-4552 ON EXPOSED COPPER

-IPC CLASSIFICATION:
- BARE CIRCUIT - IPC-A-600/IPC-6013 CLASS 3
- ASSEMBLY - IPC-A-610/J-STD-001 CLASS 3

-MECHANICAL PROPERTIES:
- NOMINAL FLEX THICKNESS = 0.185mm
- MINIMUM STATIC BEND RADIUS (IPC-2223) = 1.85mm
- SUITABLE FOR DYNAMIC OPERATION ON BEND RADII ABOVE 3.70mm

-ELECTRICAL PROPERTIES:
- MAX. CURRENT PER TRACK = 0.4A
- INSULATION RESISTANCE = 10GΩ MIN AT 500V DC
- VOLTAGE PROOF (AT 1013mbar, SEA LEVEL) = 600V DC OR AC PEAK

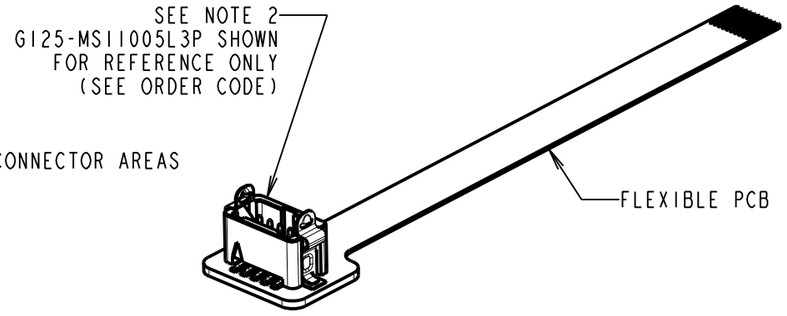

TABLE 1	
DIMENSION	CALCULATION
DIM 'A'	(TOTAL No. OF CONTACTS -2) x0.625 + 7
DIM 'B'	(TOTAL No. OF CONTACTS +1) x0.5 ±0.07
DIM 'C'	OVERALL PCB LENGTH (SEE ORDER CODE)
EXAMPLE: 75mm FLEX PCB WITH 10 CONTACT CONNECTOR (G125-MS11005L3P) PART NUMBER = G125-FIMS110-075-L DIM 'A' = 12mm DIM 'B' = 6mm DIM 'C' = 75mm	

RTP	5	06.05.21	30532
NAME	ISS.	DATE	CN/CO
APPROVED:	R.PORTLOCK		
CHECKED:	M.RUDKIN		
DRAWN:	R.PORTLOCK		
CUSTOMER REF.:			
ASSEMBLY DRG:			

HARWIN
www.harwin.com
technical@harwin.com

THIS DRAWING AND ANY INFORMATION OR DESCRIPTIVE MATTER SET OUT HEREON ARE CONFIDENTIAL AND COPYRIGHT PROPERTY OF THE HARWIN GROUP AND MUST NOT BE DISCLOSED, LOANED, COPIED OR USED FOR MANUFACTURING, TENDERING OR FOR ANY OTHER PURPOSE WITHOUT THEIR WRITTEN PERMISSION.

TOLERANCES UNLESS STATED:
X. = ±1mm
X.X = ±0.50mm
X.XX = ±0.20mm
X.XXX = ±0.01mm
ANGLES = ±5°

MATERIAL: SEE ABOVE
FINISH: SEE ABOVE
S/AREA: mm²

TITLE: G125 LATCHED FLEX PCB ASSEMBLY

DRAWING NUMBER: G125-FIXXXXX-XXX-L

SHT 2 OF 2