THIS DRAWING IS UNPUBLISHED. RELEASED FOR PUBLICATION 2013
© COPYRIGHT 2013 BY TE CONNECTIVITY ALL RIGHTS RESERVED.

LOC	DIST

REVISIONS

P	LTR	DESCRIPTION	DATE	DWN	APVD
	C	REVISED PER E.O. P20815	3-19-11	XS	RDR
	D	REVISED PER E.O. P20977	6-28-11	XS	RDR
	D1	REVISED PER ECO-14-006488	4-30-14	JA	DM
	E	REVISED PER E-20-008459	04MAY2020	CO	IG

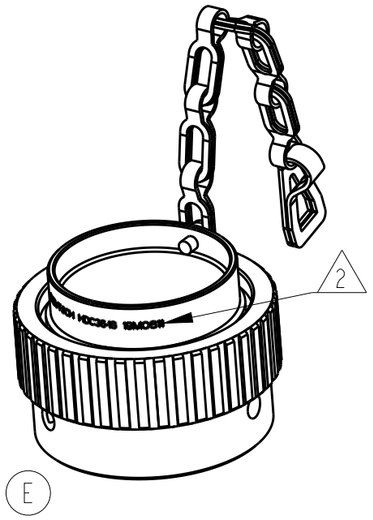

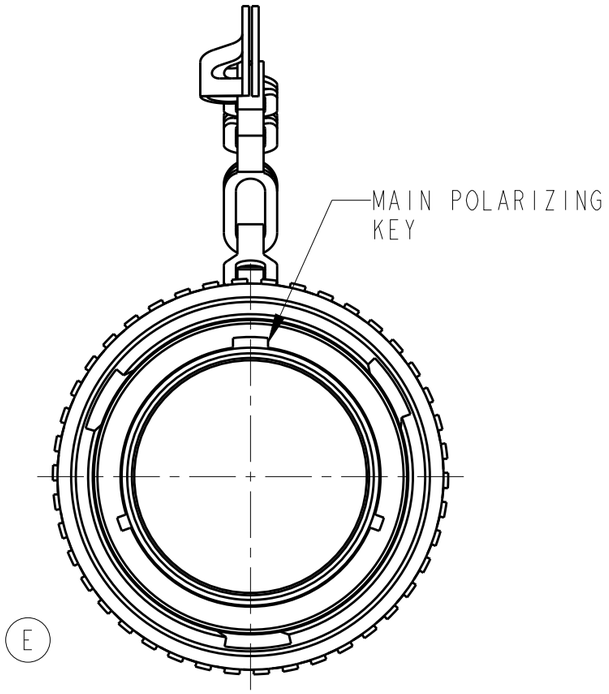

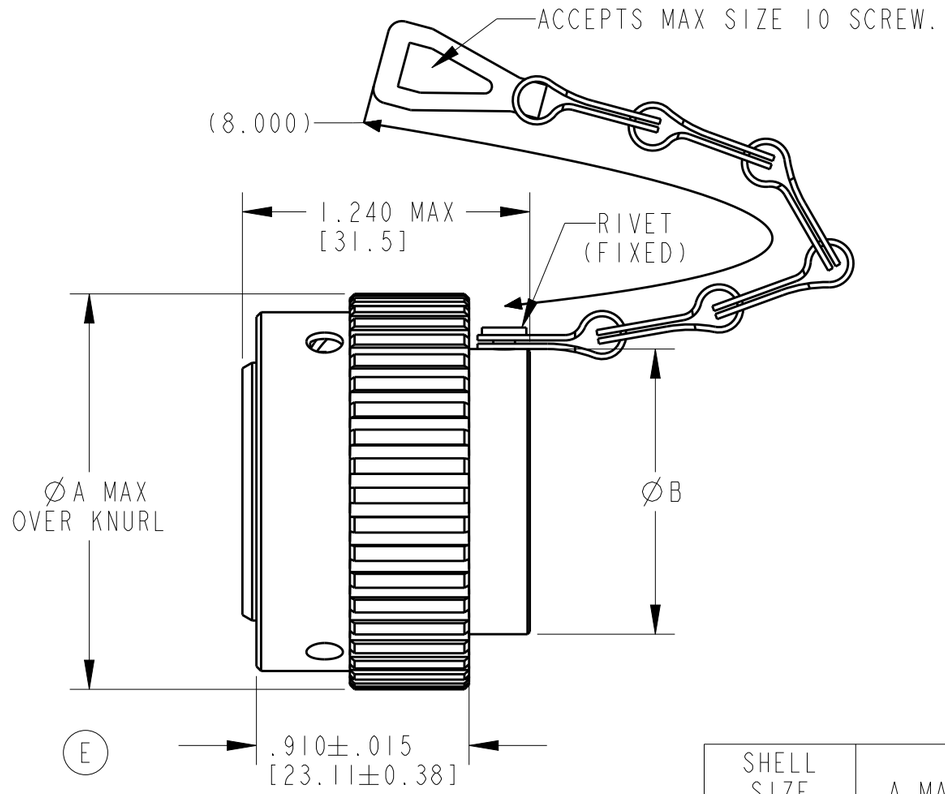

SHELL SIZE XX	A MAX. Ø	ØB ±.010 [±0.25]	WEIGHT IN GRAMS
18	1.692 [42.97]	1.220 [30.98]	46.59
24	1.942 [49.32]	1.470 [37.33]	50.62

2 DATE CODE: IDENTIFIES THE YEAR, MONTH, DAY AND HOUR OF ASSEMBLY. (E)
YEAR: FIRST AND SECOND DIGIT (19 = 2019).
MONTH: THIRD DIGIT, EXCLUDING "I", A=JAN, B=FEB,...M=DEC.
DAY: FOURTH AND FIFTH DIGITS (06 = 6th DAY)
HOUR: SIXTH AND SEVENTH DIGITS (11 = 11AM)

1 MATERIAL: SHELL: ALUMINUM; CHAIN: STAINLESS STEEL.

NOTES:

THIS DRAWING IS A CONTROLLED DOCUMENT.

DIMENSIONS: INCHES[mm]

TOLERANCES UNLESS OTHERWISE SPECIFIED:
0 PLC ±
1 PLC ±
2 PLC ±
3 PLC ±.025 [.64]
4 PLC ±
ANGLES ±0°30'0"

MATERIAL 1

FINISH

DWN 29APR2014 JAIME C. APOSTOL
CHK 30APR2014 ILINA GRANTCHAROVA
APVD 30APR2014 DAVID MEYER

PRODUCT SPEC

APPLICATION SPEC

WEIGHT SEE TABLE

CUSTOMER DRAWING

TE Connectivity

NAME COVER, PROTECTIVE BAYONET COUPLING (TO MATE WITH RECEPTACLE)

SIZE	CAGE CODE	DRAWING NO	RESTRICTED TO
A3	4AFU8	C-HDC36-XX	-

SCALE 1.500 SHEET 1 OF 1 REV E

1470-19 (3/11)