HONEYWELL

1CH507-5B

See full Datasheet below...

onlinecomponents.com
THE ONLINE DISTRIBUTOR OF ELECTRONIC COMPONENTS

BUY NOW

MASTER™ ELECTRONICS

BUY NOW

masterelectronics.com & onlinecomponents.com
are **authorized** e-commerce distributors
of electronic components.

MICRO SWITCH
FREEPORT ILLINOIS U.S.A.
A DIVISION OF HONEYWELL
FED. MFG. CODE 91929

SWITCH – ENCLOSED

CATALOG LISTING
1CH 507-5B

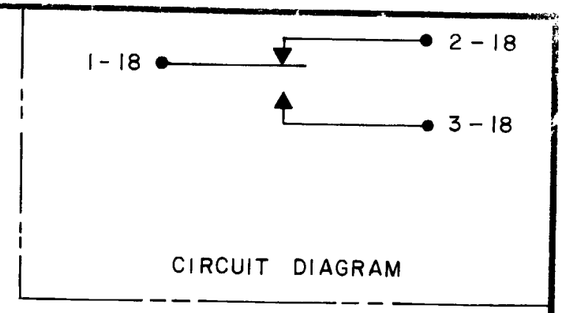

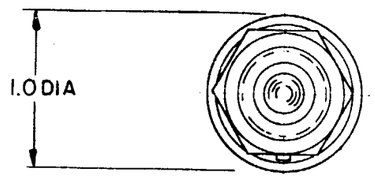

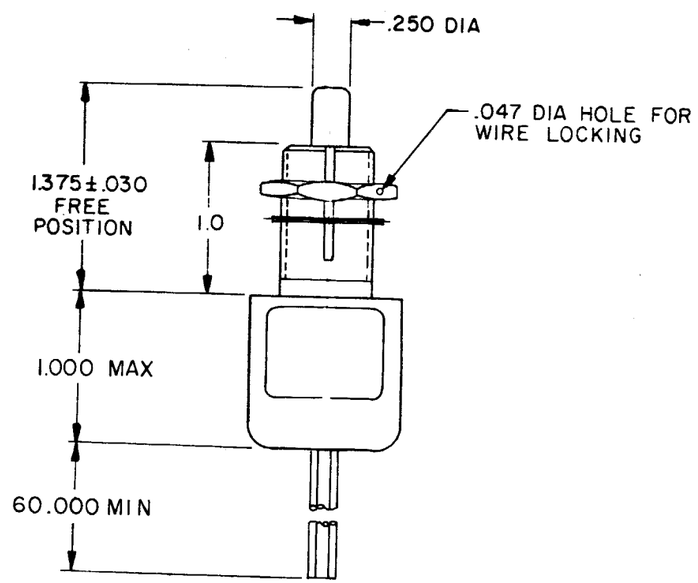

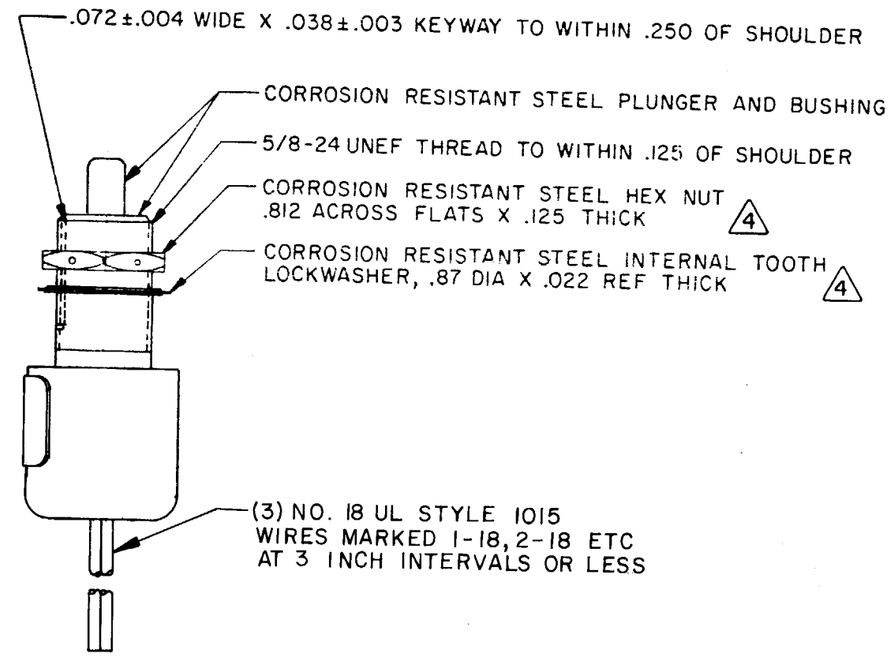

CHARACTERISTICS	
OPERATING FORCE	3-6 LB
FULL OVERTRAVEL FORCE	17 LB MAX
RELEASE FORCE	2 LB MIN
PRETRAVEL	.040 MAX
DIFFERENTIAL TRAVEL	.020 MAX
OVERTRAVEL	.250 MIN

ELECTRICAL DATA

CONTACT ARRANGEMENT
S P D T (1)

LOAD	28 VDC	
	SEA LEVEL	50,000 FT.
RES	4	4
IND	2	2
MOTOR	4	

THIS DRAWING COVERS A PROPRIETARY ITEM AND IS THE PROPERTY OF MICRO SWITCH, A DIVISION OF HONEYWELL. THIS DRAWING IS NOT TO BE COPIED OR USED WITHOUT THE APPROVAL OF MICRO SWITCH.

THIRD ANGLE PROJECTION

SCALE FULL

DO NOT SCALE PRINT.

TOLERANCES
APPLY TO DESIGN UNITS. CONVERSIONS ARE ONLY FOR REFERENCE. UNLESS NOTED TOLERANCES ARE ±

	DIM. mm	TOL. mm/in	DIM. in	TOL. mm/in
NO PLACES	X	1/06		
ONE PLACE	X.X	0.4/0.016	X.X	0.8/.03
TWO PLACES	X.XX	0.15/.006	X.XX	0.38/.015
THREE PLACES			X.XXX	0.13/.005
ANGLES				

DESIGN UNITS: SI METRIC ☐ US CUSTOMARY ☒

RAW MATERIAL–COMMERCIAL STANDARD
MICRO SWITCH STANDARDS APPLY

DIMENSIONS ARE TO BE MET BEFORE PROTECTIVE COATINGS ARE APPLIED

WEIGHT 7.1 OZ MAX

NOTES
1 CORROSION RESISTANT STEEL ENCLOSURE
2 - MICRO IDENTIFICATION, CIRCUIT DIAGRAM, DATE CODE AND CATALOG LISTING ARE SHOWN ON NAMEPLATE
3 - SWITCH SEAL PER MIL-S-8805, SYMBOL 2
4 HARDWARE MAY BE PACKAGED UNASSEMBLED PER MIL-S-8805

DRAWN	S J B	1 FEB 79
CHECK	C E B	6 FEB 79
CHECK		
CHECK		
CHECK		
CHECK		
CHECK		
CHECK		

FO-5285 1-A

DRAWING NUMBER	M 1CH 507-5B
ISSUE	8
RELEASE NO.	PR-7655
REPLACES	

REVISIONS

A	PR-7655	S J B 2 FEB 79
B	CO 45638	T M M 2 MAR 79
C	CO 45927	R J H 14 MAY 79
D	CO 47573	J M J 25 JUL 80
E	C058843	TSK 23 JAN 86
F	C063259	TSK 15 APR 88
G	CO 68516	M A M 30 OCT 90