MICRO SWITCH
FREEPORT, ILLINOIS U.S.A.
A DIVISION OF HONEYWELL
FED. MFG. CODE 81929

SWITCH - ENCLOSED

CATALOG LISTING
1EN8-8

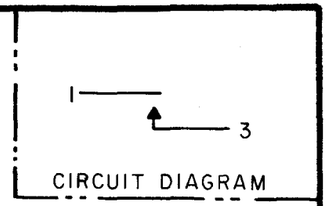

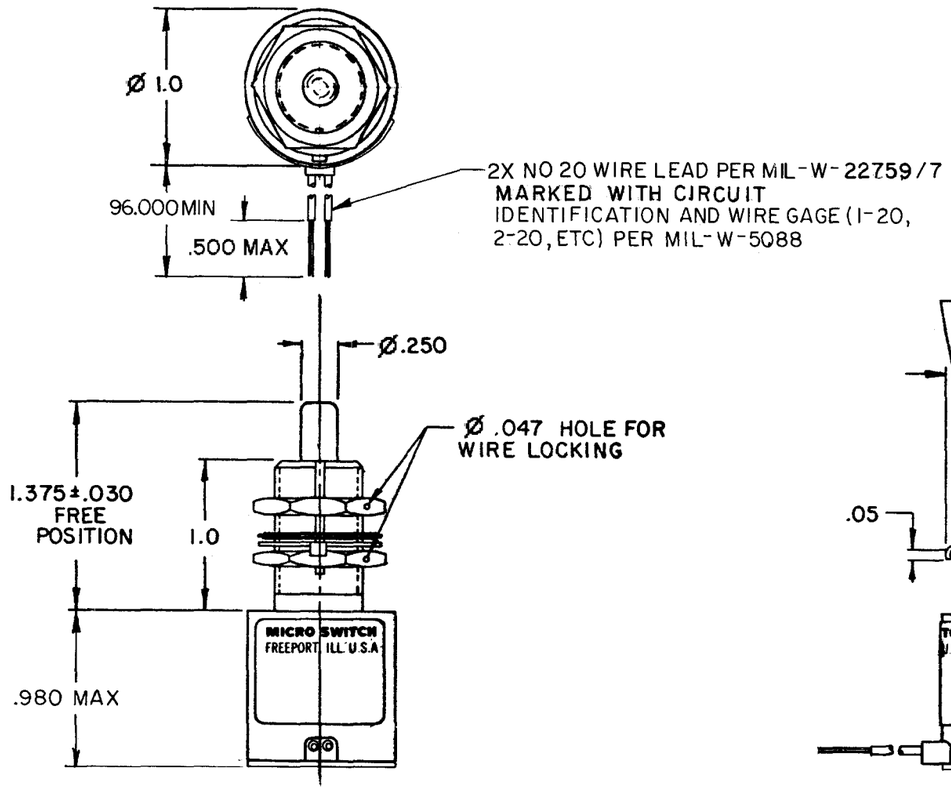

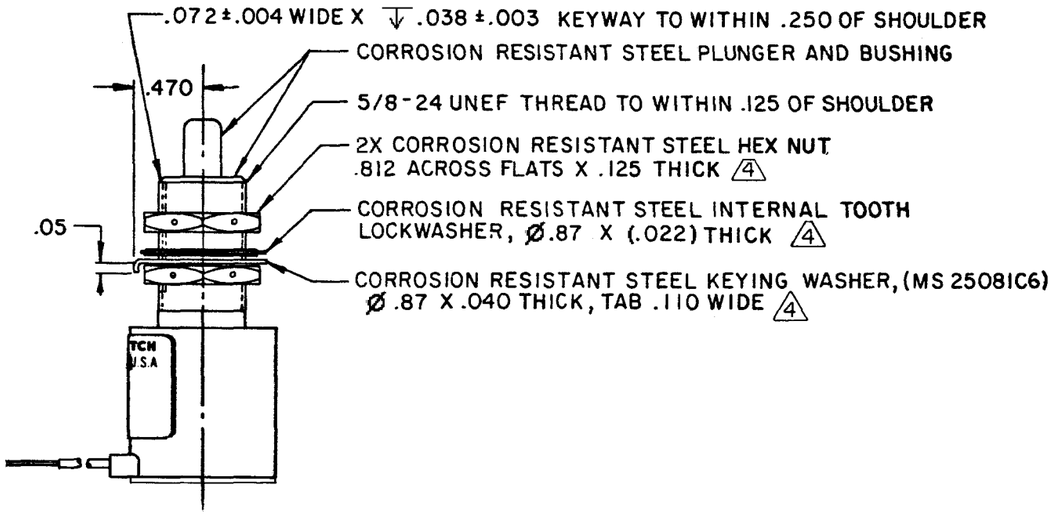

NOTES
1 CORROSION RESISTANT STEEL ENCLOSURE
2 SWITCH SEALED PER MIL-S-8805, SYMBOL 4
3 CIRCUIT DIAGRAM, DATE CODE, FED. MFG. CODE AND CATALOG LISTING ARE SHOWN ON NAMEPLATE
4 HARDWARE MAY BE PACKAGED UNASSEMBLED PER MIL-S-8805

ANSI Y14.5M-1982 APPLIES

THIS DRAWING COVERS A PROPRIETARY ITEM AND IS THE PROPERTY OF MICRO SWITCH, A DIVISION OF HONEYWELL. THIS DRAWING IS NOT TO BE COPIED OR USED WITHOUT THE APPROVAL OF MICRO SWITCH.

SCALE FULL
DO NOT SCALE PRINT

TOLERANCES
APPLY TO DESIGN UNITS. CONVERSIONS ARE ONLY FOR REFERENCE. UNLESS NOTED, TOLERANCES ARE ±

	DIM. mm	TOL. mm/in	DIM. in	TOL. mm/in
NO PLACES	X	1/.04		
ONE PLACE	X.X	0.4/.016	X.X	0.8/.03
TWO PLACES	X.XX	0.15/.006	X.XX	0.38/.015
THREE PLACES			X.XXX	0.13/.005
ANGLES				

DESIGN UNITS SI METRIC ☐ US CUSTOMARY ☒

THIRD ANGLE PROJECTION

WEIGHT 4.5 OZ MAX

CHARACTERISTICS

OPERATING FORCE - - - - - - - - 6-12 LB
FULL OVERTRAVEL FORCE - - - - - - 30 LB MAX
RELEASE FORCE - - - - - - - - - - 4 LB MIN
PRETRAVEL - - - - - - - - - - - - .040 MAX
DIFFERENTIAL TRAVEL - - - - - - - .020 MAX
OVERTRAVEL - - - - - - - - - - - .250 MIN

ELECTRICAL DATA

CONTACT ARRANGEMENT
S P N O

LOAD	28 VDC SEA LEVEL	28 VDC 50,000 FT.
RES	4	4
IND	2	2
MOTOR	4	
LAMP		

DRAWN	KAG	16 NOV 81	
CHECK		81	
CHECK	DW	12 NOV 81	
CHECK			
CHECK	GLL	17 NOV 81	
CHECK			
ISSUE	7	JAF	14 DEC 98
DRAWING NUMBER	M	RELEASE NO. PR-10723	REPLACES
1EN8-8	PAGE 1 OF 1		

REVISIONS

A	PR-10723	KAG 16 NOV 81
B	C051725C	KAG 19 JAN 82
C	C057370	TSK 15 MAY 85
D	C074101	DAW 8 FEB 93
E	CO-77504 C	DLT 26 JUL 94
F	CO-94005	PPF 14 DEC 98

FORMTEK FO-9285-1-B