MICRO SWITCH
a Honeywell Division
FED. MFG. CODE 91929

SWITCH - TOGGLE (MAGNETIC HOLD-IN)

CATALOG LISTING
25ET120-S

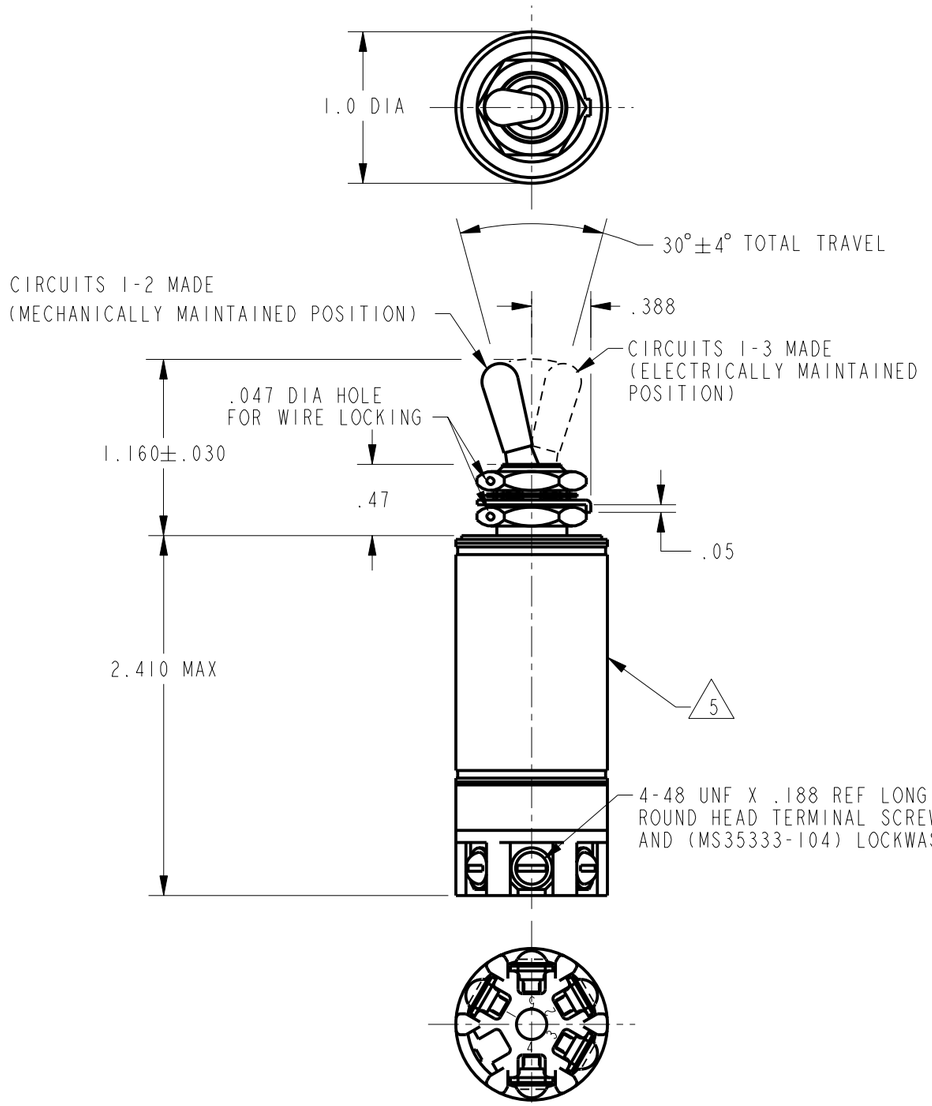

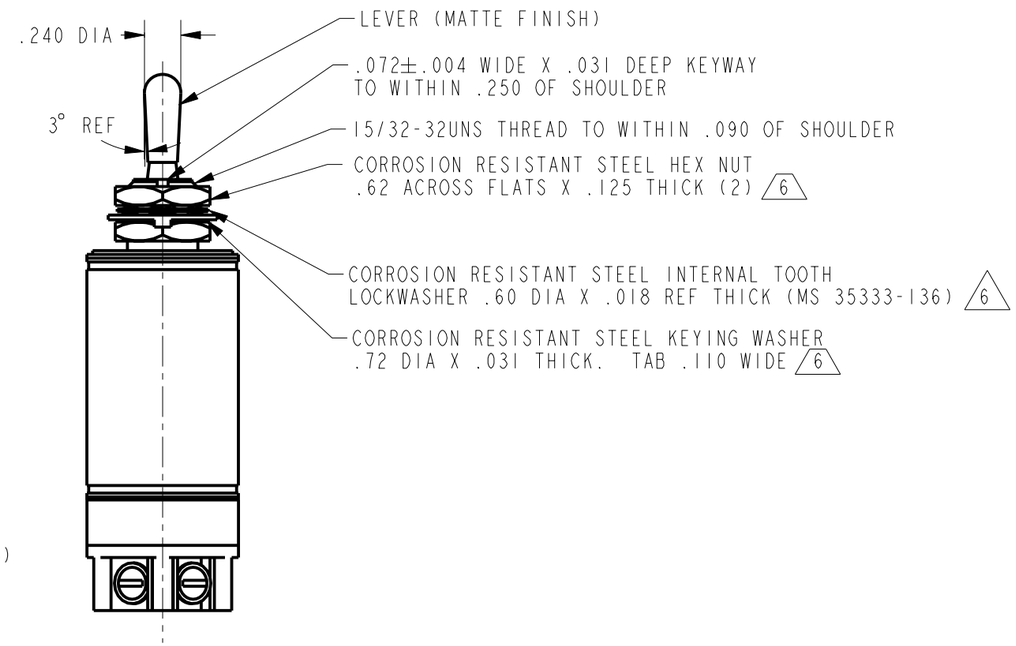

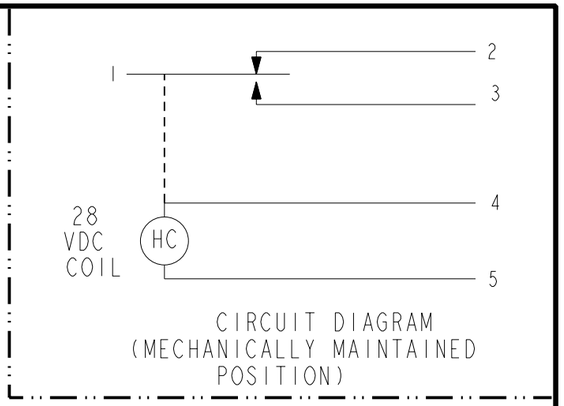

NOTES
1 - EXPOSED PARTS ARE OF CORROSION RESISTANT MATERIAL OR ARE SUITABLY PROTECTED TO PREVENT CORROSION, ENCLOSURE FINISHED WITH BLUE EPOXY BASED ENAMEL COLOR NO. 25184 PER FEDERAL STANDARD 595
2 - SWITCH SEALED PER MIL-S-5594
3 HOLD IN VOLTAGE: THE MINIMUM SPECIFIED VOLTAGE AT WHICH THE LEVER WILL REMAIN ACTUATED. HOLD IN MAY OCCUR AT A LOWER VALUE. DROP OUT VOLTAGE: THE VOLTAGE RANGE IN WHICH THE LEVER WILL BE RELEASED
4 - CIRCUITS CAN BE TRANSFERRED MANUALLY. ENERGIZING THE COIL WILL NOT CAUSE TRANSFER OF CIRCUITS
5 CIRCUIT IDENTIFICATION IS SHOWN ON SWITCH
6 HARDWARE MAY BE FURNISHED UNASSEMBLED PER MIL-S-5594

THIS DRAWING COVERS A PROPRIETARY ITEM AND IS THE PROPERTY OF MICRO SWITCH. A DIVISION OF HONEYWELL. THIS DRAWING IS NOT TO BE COPIED OR USED WITHOUT THE APPROVAL OF MICRO SWITCH

THIRD ANGLE PROJECTION

SCALE FULL

DO NOT SCALE PRINT

UNLESS OTHERWISE SPECIFIED TOLERANCES ARE

ONE PLACE	(.0)	±.030
TWO PLACE	(.00)	±.015
THREE PLACE	(.000)	±.005
ANGLES		±

WEIGHT 4.0 OZ MAX

~~ANSI Y14.5M-1982 APPLIES~~

CHARACTERISTICS 3

SOLENOID RATING AT 20°C

STEADY STATE LIMITS ------ 20-29 VDC
HOLD IN ---------- 10 VDC
DROP OUT ---------- 0-10 VDC
COIL RESISTANCE --------- 220 OHM MIN
OPERATING FORCE --------- 7 LBS MAX
OVERRIDE FORCE AT 29 VDC --- 10 LBS MAX

ELECTRICAL DATA

CONTACT ARRANGEMENT
S P D T

VOLTAGE	RATINGS IN AMPERES							
	SEA LEVEL				65,000 FT			
	INRUSH	RES	IND	MOTOR	INRUSH	RES	IND	MOTOR
28 VOLTS DC		4	3	4		4	2.5	4

25ET120-S
CATALOG LISTING
PAGE 1 OF 1
RELEASE NO. PR-14820
REPLACES -
ISSUE 5
M
CHECK
REVISIONS
A 205709 CSL 31 MAY 02
CHECK
31 MAY 02
SAV
CHECK
31 MAY 02
CSL
DRAWN
PTC/CAD 2D