MICRO SWITCH
a Honeywell Division
FED. MFG. CODE 91929

SWITCH - TOGGLE (MAGNETIC HOLD-IN)

CATALOG LISTING
26ET86-2-G

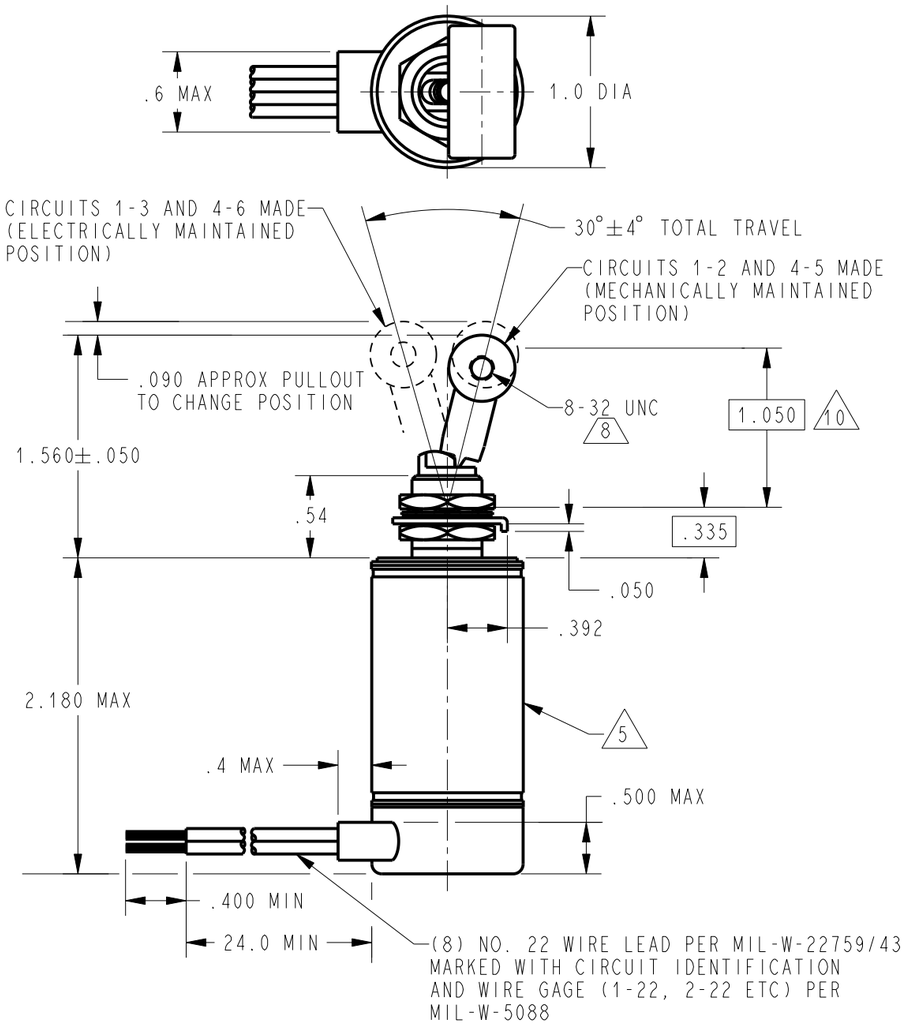

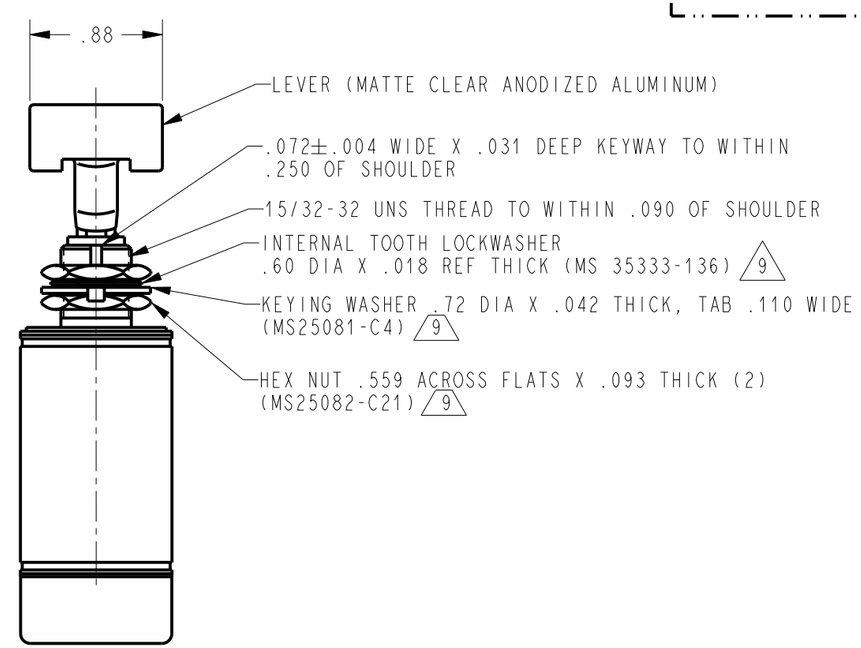

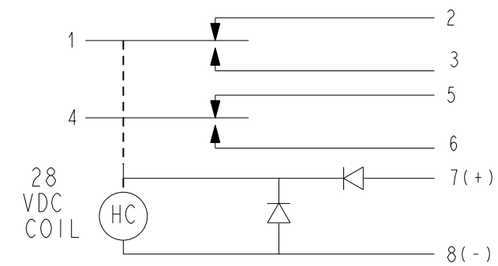

CIRCUIT DIAGRAM (MECHANICALLY MAINTAINED POSITION)

NOTES
1 - EXPOSED PARTS ARE OF CORROSION RESISTANT MATERIAL OR ARE SUITABLY PROTECTED TO PREVENT CORROSION. ENCLOSURE FINISHED WITH BLUE EPOXY-BASED ENAMEL COLOR NO. 25184 PER FEDERAL STANDARD 595
2 - SWITCH SEALED PER MIL-S-5594
3 HOLD IN VOLTAGE: THE MINIMUM SPECIFIED VOLTAGE AT WHICH THE LEVER WILL REMAIN ACTUATED. HOLD IN MAY OCCUR AT A LOWER VALUE. DROP OUT VOLTAGE: THE VOLTAGE RANGE IN WHICH THE LEVER WILL BE RELEASED
4 - CIRCUITS CAN BE TRANSFERRED MANUALLY. ENERGIZING THE COIL WILL NOT CAUSE TRANSFER OF CIRCUITS
5 CIRCUIT IDENTIFICATION IS SHOWN ON SWITCH
6 - SWITCHES DO NOT NECESSARILY OPERATE SIMULTANEOUSLY
7 - THE DIODES ARE JANTXV TYPE AND LIMIT THE EMI: SPIKES (TRANSIENTS OF DURATION LESS THAN 500 MICRO SECONDS) GENERATED BY THE SWITCH COIL SHALL NOT EXCEED +42 VOLTS OR -14 VOLTS ABSOLUTE
8 SET SCREW FURNISHED TO SECURE LEVER (AN 565 HEXAGON SOCKET SETSCREW (1) ASSEMBLE THE SET SCREW TO THE LEVER AND FURNISH THE LEVER IN A SEPARATE BAG. THE LEVER SHOULD NOT BE ASSEMBLED TO THE SWITCH.
9 HARDWARE MAY BE FURNISHED UNASSEMBLED PER MIL-S-5594
10 FORCE TO BE APPLIED AT THIS POINT IN A DIRECTION PERPENDICULAR TO THE LEVER LONGITUDINAL AXIS

ANSI Y14.5M-1982 APPLIES

THIS DRAWING COVERS A PROPRIETARY ITEM AND IS THE PROPERTY OF MICRO SWITCH, A DIVISION OF HONEYWELL. THIS DRAWING IS NOT TO BE COPIED OR USED WITHOUT THE APPROVAL OF MICRO SWITCH

THIRD ANGLE PROJECTION

SCALE FULL

DO NOT SCALE PRINT

UNLESS OTHERWISE SPECIFIED TOLERANCES ARE

ONE PLACE	(.0)	±.030
TWO PLACE	(.00)	±.015
THREE PLACE	(.000)	±.005
ANGLES		±

WEIGHT 8.0 OZ MAX

CHARACTERISTICS 3

SOLENOID RATING AT 20°C

STEADY STATE LIMITS	20-30 VDC
HOLD IN	15 VDC
DROP OUT	1.5-15 VDC
OVERRIDE FORCE AT 30 VDC 10	2.5-10 LB MAX
OPERATING FORCE 10	7 LB MAX
COIL RESISTANCE	220 OHM MIN
PULLOUT TO UNLOCK	3-5 LBS

ELECTRICAL DATA

CONTACT ARRANGEMENT
S P D T (2)

VOLTAGE	RATINGS IN AMPERES							
	SEA LEVEL				65,000 FT			
	INRUSH	RES	IND	MOTOR	INRUSH	RES	IND	MOTOR
28 VOLTS DC		4	2.5	4		4	2.0	4

REVISIONS

A	205955	CSL 10 JUL 02
B	0004609	AS 13APR04

PTC/CAD	2D	
DRAWN	CSL	10 JUL 02
CHECK	SAV	10 JUL 02
CHECK	AK	14 APR 04
CHECK		
CHECK		
REPLACES	-	
RELEASE NO.	PR-7096	
CATALOG LISTING	26ET86-2-G	
PAGE	1 OF 1	
ISSUE	19	