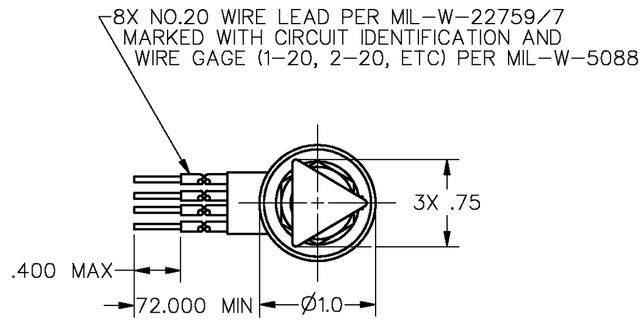

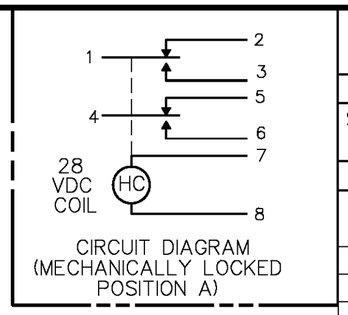

CIRCUIT DIAGRAM
(MECHANICALLY LOCKED
POSITION A)

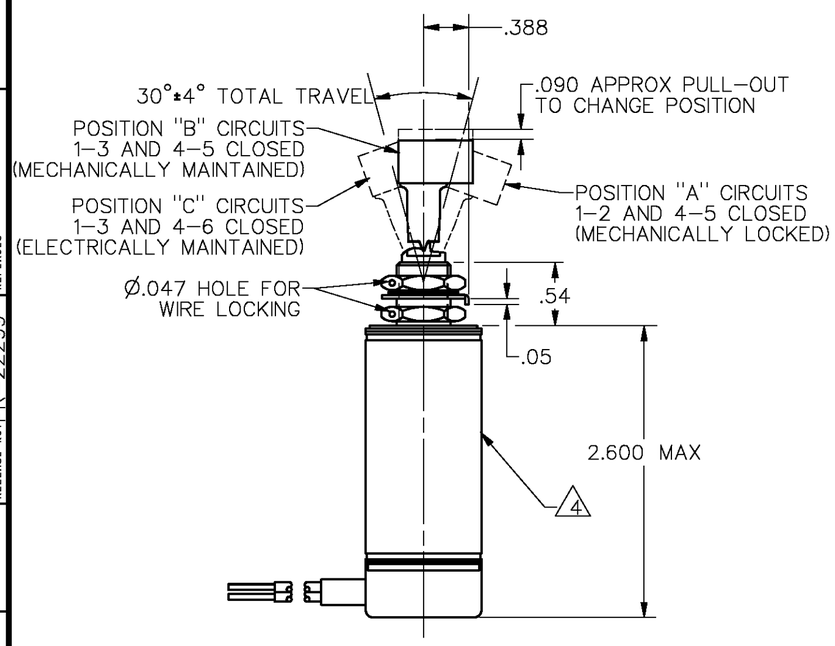

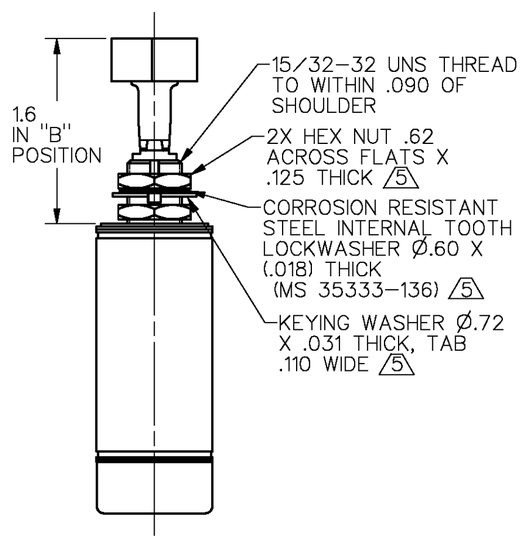

M	27ET50-6-P

SPECIFICATION DETAILS:	
STANDARD:	CONFORMS TO MIL-S-5594
CONSTRUCTION:	
ENCLOSURE DESIGN	SEALED TO 1 X 10-6 ATM * CC/S PER MIL-S-5594 PARA. 3.12 & 4.9.8
SEAL MATERIAL	SILICONE RUBBER
CONTACT MATERIAL & CONFIGURATION	SMOOTH GOLD PLATED SILVER CONTACTS 3
CIRCUIT CONFIGURATION	2X S P D T
TERMINATION	20 GAGE MIL-W-22759/7
WEIGHT	14 ozf (4.0N) MAX
EXPOSED METALS	CORROSION RESISTANT OR SUITABLY PROTECTED TO PREVENT CORROSION
ENCLOSURE PAINT	BLUE EPOXY BASED ENAMEL COLOR NO. 25184 PER FEDERAL STANDARD 595
ELECTRICAL CHARACTERISTICS:	
ELECTRICAL RATINGS	VOLTAGE / INDUCTIVE / RESISTIVE
-SEA LEVEL	28 VDC / 2A / 7A
-65,000 FEET	28 VDC / 1.5A / 5A
DIELECTRIC STRENGTH & INSULATION RESISTANCE	DIELECTRIC STRENGTH (≈60 Hz FOR 5 SECONDS) / INSULATION RESISTANCE
-BETWEEN ALL TERMINALS AND EXPOSED NON-CURRENT CARRYING METAL OR GROUND PARTS	1000 V Rms, 1000 µA (MAX LEAKAGE) / N/A
-BETWEEN ALL TERMINALS OF MUTUALLY INSULATED CIRCUITS, INCLUDING BETWEEN POLES	1000 V Rms, 1000 µA (MAX LEAKAGE) / N/A
-BETWEEN ALL UNCONNECTED TERMINALS OF THE SAME POLE	1000 V Rms, 1000 µA (MAX LEAKAGE) / N/A
SWITCH RESISTANCE	N/A
RECOMMENDATION OR USE IN APPL LESS THAN .5 amps AND/OR 12 volts	YES 3
MECHANICAL CHARACTERISTICS: 2	
STEADY STATE LIMITS	20-30 VDC
HOLD IN VOLTAGE	15 VDC
DROP OUT VOLTAGE	1.5-15 VDC
OPERATING FORCE AT 30 VDC	7lbf (31, 1 N) MAX
OVERRIDE FORCE AT 30 VDC	10lbf (44, 5 N) MAX
SOLENOID RESSITANCE AT 30 VDC AND 68°F (20°C)	220 OHMS MIN
MOUNTING STRENGTH	15lbf-IN (1,7 NM) MAX
ACTUATING STRENGTH	25lbf (111,2N) PER MIL-S-5594 PARA. 3.8 & 4.9.4.A 15lbf (66,7N) PER MIL-S-5594 PARA. 3.8 & 4.9.4.B
LIFE:	
MECHENICAL LIFE	40,000 CYCLES MIN PER MIL-S-5594 PARA. 3.10 & 4.9.6
ELECTRICAL LIFE AT FULL RATED LOAD	20,000 CYCLES MIN PER MIL-S-5594 PARA. 3.11 & 4.9.7
ENVIRONMENTAL:	
TEMPERATURE RANGE	-85°F (-65°C) TO +160°F (+71°C)
ALTITUDE RANGE	SEA LEVEL TO 65,000 FT
SHOCK	PER MIL-S-5594 PARA. 3.14 & 4.9.10
VIBRATION	PER MIL-S-5594 PARA. 3.13 & 4.9.9
MOISTURE RESISTANCE	PER MIL-S-5594 PARA. 3.17 & 4.9.13
ACCELERATION	PER MIL-S-5594 PARA. 3.15 & 4.9.11
SALT SPRAY	PER MIL-S-5594 PARA. 3.16 & 4.9.12
SAND AND DUST	PER MIL-S-5594 PARA. 3.18 & 4.9.14
EXPLOSION	PER MIL-S-5594 PARA. 3.19 & 4.9.15

NOTES
1 - CIRCUITS CAN BE TRANSFERRED MANUALLY. ENERGIZING THE COIL WILL NOT CAUSE TRANSFER OF CIRCUITS
2 HOLD IN VOLTAGE: THE MINIMUM SPECIFIED VOLTAGE AT WHICH THE LEVER WILL REMAIN ACTUATED. HOLD IN MAY OCCUR AT A LOWER VALUE. DROP OUT VOLTAGE: THE VOLTAGE RANGE IN WHICH THE LEVER WILL BE RELEASED
3 CONTACT HONEYWELL-MICRO SWITCH IF ADDITIONAL INFORMATION ON LOW ENERGY LOADS IS REQUIRED OR FOR HELP WITH SPECIFIC APPLICATIONS
4 SWITCH LABEL TO SHOW: MICRO SWITCH, FEDERAL MANUFACTURING CODE, CATALOG LISTING, CIRCUIT DIAGRAM AND DATE CODE
5 HARDWARE MAY BE FURNISHED UNASSEMBLED PER MIL-S-5594

MASTER REDUCED
ANSI Y14.5M-1982 APPLIES

THIS DRAWING COVERS A PROPRIETARY ITEM AND IS THE PROPERTY OF MICRO SWITCH. A DIVISION OF HONEYWELL. THIS DRAWING IS NOT TO BE COPIED OR USED WITHOUT THE APPROVAL OF MICRO SWITCH.

MICRO SWITCH
a Honeywell Division
FED. MFG. CODE 01929

SWITCH - TOGGLE
(MAGNETIC HOLD-IN)

CATALOG LISTING
27ET50-6-P

THIRD ANGLE PROJECTION

SCALE FULL

DO NOT SCALE PRINT

UNLESS OTHERWISE SPECIFIED TOLERANCES ARE

ONE PLACE	(.0)	±.030
TWO PLACES	(.00)	±.015
THREE PLACES	(.000)	±.005
ANGLES		±

WEIGHT

DRAWING NUMBER 27ET50-6-P
ISSUE 2 M PAGE 1 OF 1
RELEASE NO. PR-22299 REPLACES
CHECK
REVISIONS
A PR-22299 J J A 10 SEP 96
CHECK
CHECK
CHECK
DRAWN J J A 10SEP96
DDM/CAD