MICRO SWITCH
a Honeywell Division
FED. MFG. CODE 91929

SWITCH – TOGGLE (MAGNETIC HOLD – IN)

CATALOG LISTING
27ET51–T2

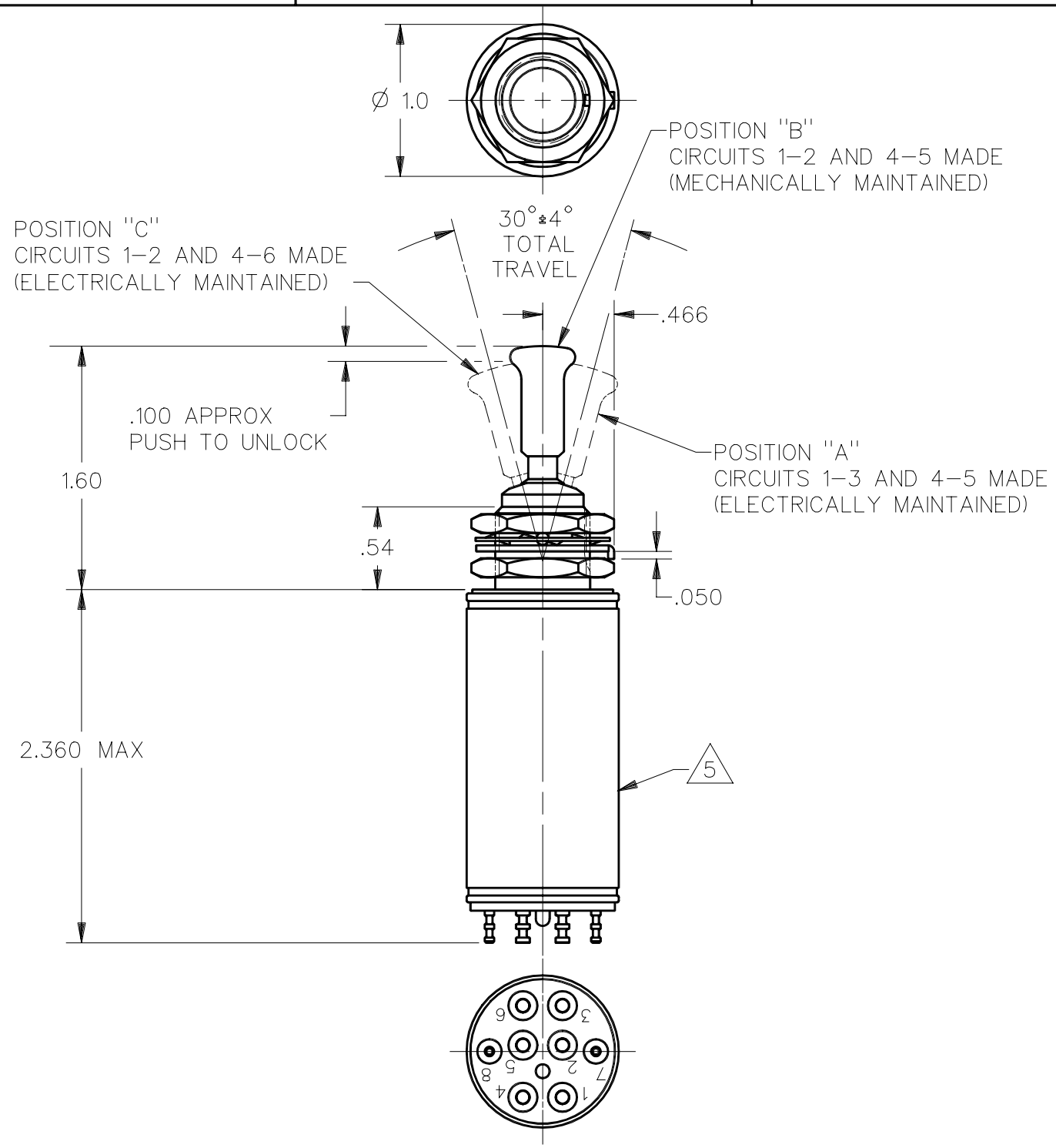

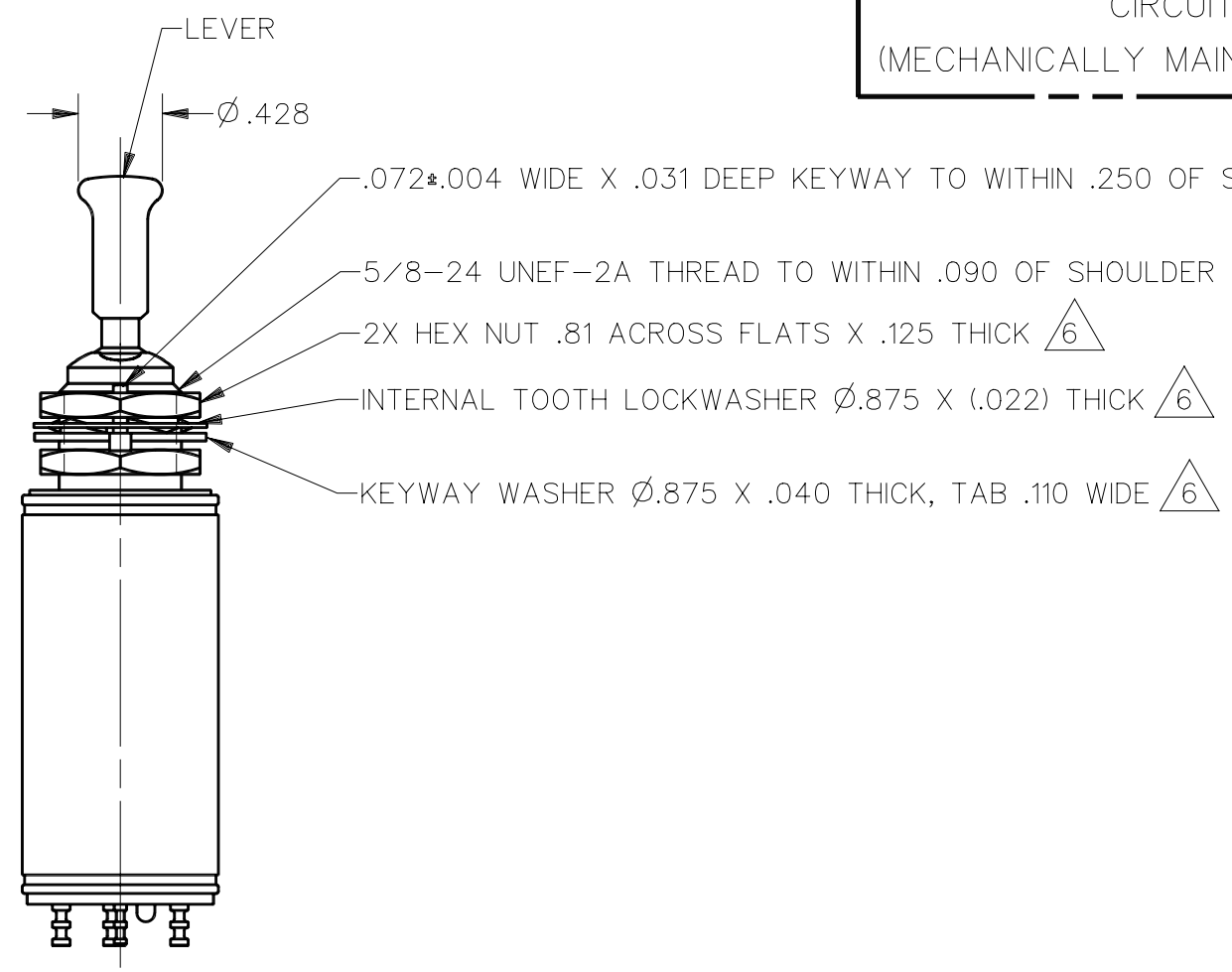

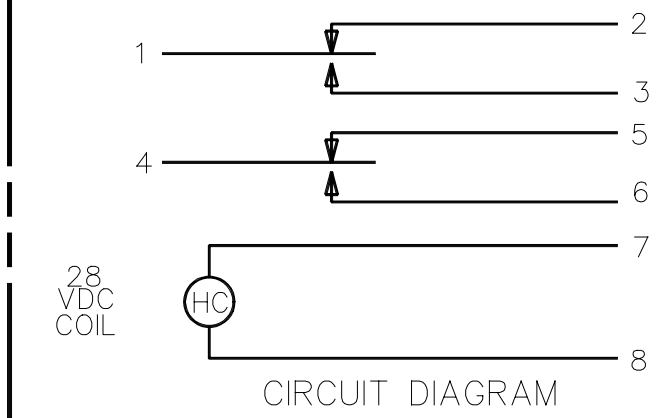

CIRCUIT DIAGRAM
(MECHANICALLY MAINTAINED POSITION B)

NOTES
1 – EXPOSED PARTS ARE OF CORROSION RESISTANT MATERIAL OR ARE SUITABLY PROTECTED TO PREVENT CORROSION. ENCLOSURE FINISHED WITH BLUE EPOXY BASED ENAMEL COLOR NO. 25184 PER FEDERAL STANDARD 595
2 – SWITCH SEALED PER MIL–S–5594
3 HOLD IN VOLTAGE: THE MINIMUM SPECIFIED VOLTAGE AT WHICH THE LEVER WILL REMAIN ACTUATED. HOLD IN MAY OCCUR AT A LOWER VALUE
DROP OUT VOLTAGE: THE VOLTAGE RANGE IN WHICH THE LEVER WILL BE RELEASED
4 – CIRCUIT CAN BE TRANSFERRED MANUALLY. ENERGIZING THE COIL WILL NOT CAUSE TRANSFER OF SWITCH
5 CIRCUIT IDENTIFICATION IS SHOWN ON SWITCH
6 HARDWARE MAY BE FURNISHED UNASSEMBLED PER MIL–S–5594

THIS DRAWING COVERS A PROPRIETARY ITEM AND IS THE PROPERTY OF MICRO SWITCH. A DIVISION OF HONEYWELL. THIS DRAWING IS NOT TO BE COPIED OR USED WITHOUT THE APPROVAL OF MICRO SWITCH

THIRD ANGLE PROJECTION

SCALE FULL

DO NOT SCALE PRINT

UNLESS OTHERWISE SPECIFIED TOLERANCES ARE

ONE PLACE	(.0)	±.030
TWO PLACE	(.00)	±.015
THREE PLACE	(.000)	±.005
ANGLES		±

WEIGHT 6 OZ MAX

CHARACTERISTICS 3

SOLENOID RATING AT 20°C

STEADY STATE LIMITS — — — 20 – 29 VDC
HOLD IN — — — — — — — — — 10 VDC
DROP OUT — — — — — — — 0 – 10 VDC
COIL RESISTANCE — — — 220 OHM MIN

TO UNLOCK — — — — 2 1/2 – 4 1/2 LB

ELECTRICAL DATA

CONTACT ARRANGEMENT
2X S P D T

LOAD	28 VDC	
	SEA LEVEL	65,000 FT.
RES	7	5
IND	2	1.5

ANSI Y14.5M–1982 APPLIES

CATALOG LISTING 27ET51–T2
REPLACES
RELEASE NO. PR–20825
ISSUE 1
M
REVISIONS
CHECK
CHECK
CHECK
CHECK
DRAWN M A M 25 OCT 93
DDM/CAD