MICRO SWITCH
a Honeywell Division
FED. MFG. CODE 91929

SWITCH -TOGLE

CATALOG LISTING
29ET5-T

NOTES
1 - EXPOSED PARTS ARE OF CORROSION RESISTANT MATERIAL OR ARE SUITABLY PROTECTED TO PREVENT CORROSION, ENCLOSURE FINISHED WITH BLUE EPOXY BASED ENAMEL COLOR NO. 25184 PER FEDERAL STANDARD 595
2 - SWITCH SEALED PER MIL-S-5594
3 HOLD IN VOLTAGE: THE MINIMUM SPECIFIED VOLTAGE AT WHICH THE LEVER WILL REMAIN ACTUATED. HOLD IN MAY OCCUR AT A LOWER VALUE. DROP OUT VOLTAGE: THE VOLTAGE RANGE IN WHICH THE LEVER WILL BE RELEASED
4 - CIRCUITS CAN BE TRANSFERRED MANUALLY. ENERGIZING THE COIL WILL NOT CAUSE TRANSFER OF CIRCUITS
5 CIRCUIT IDENTIFICATION IS SHOWN ON SWITCH
6 - SWITCHES DO NOT NECESSARILY OPERATE SIMULTANEOUSLY
7 HARDWARE MAY BE FURNISHED UNASSEMBLED PER MIL-S-5594

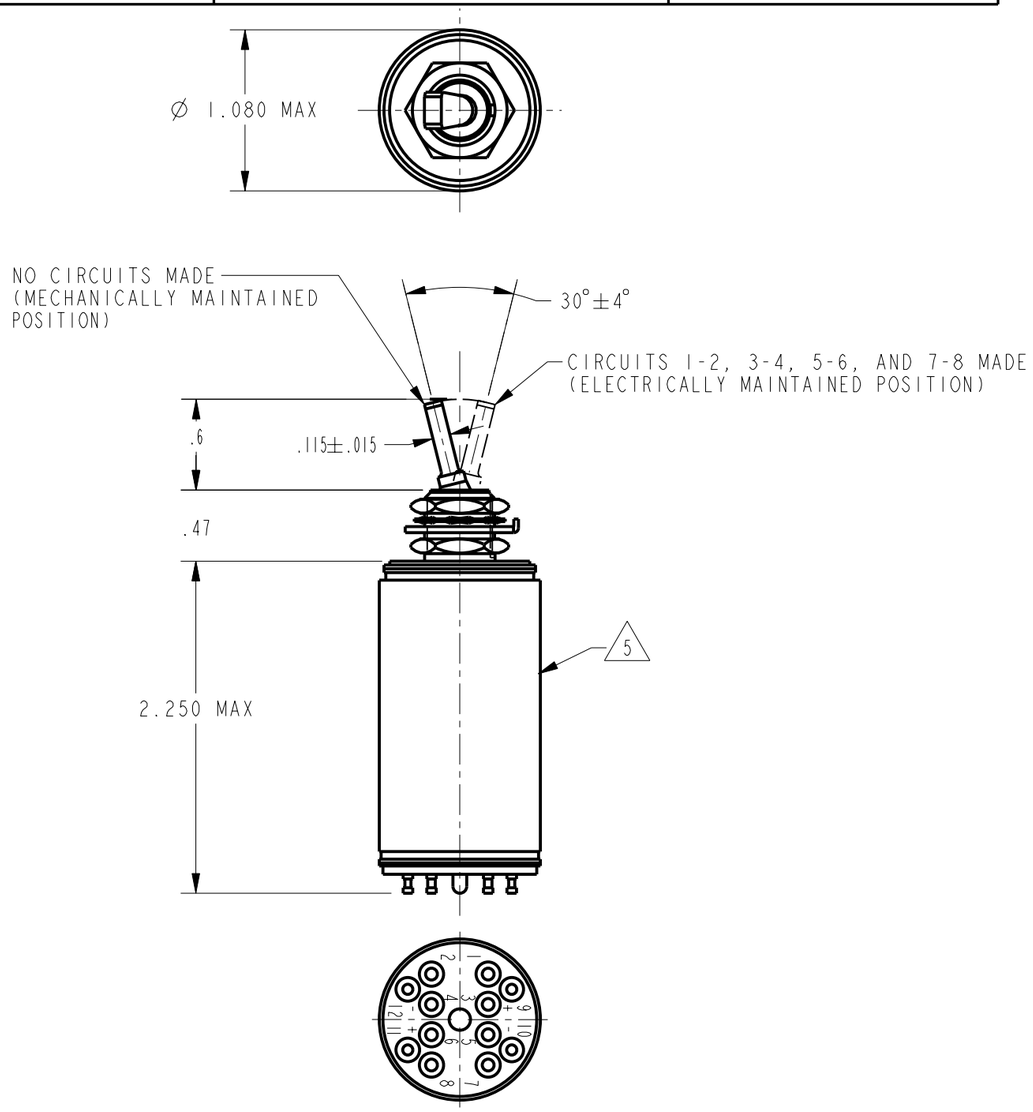

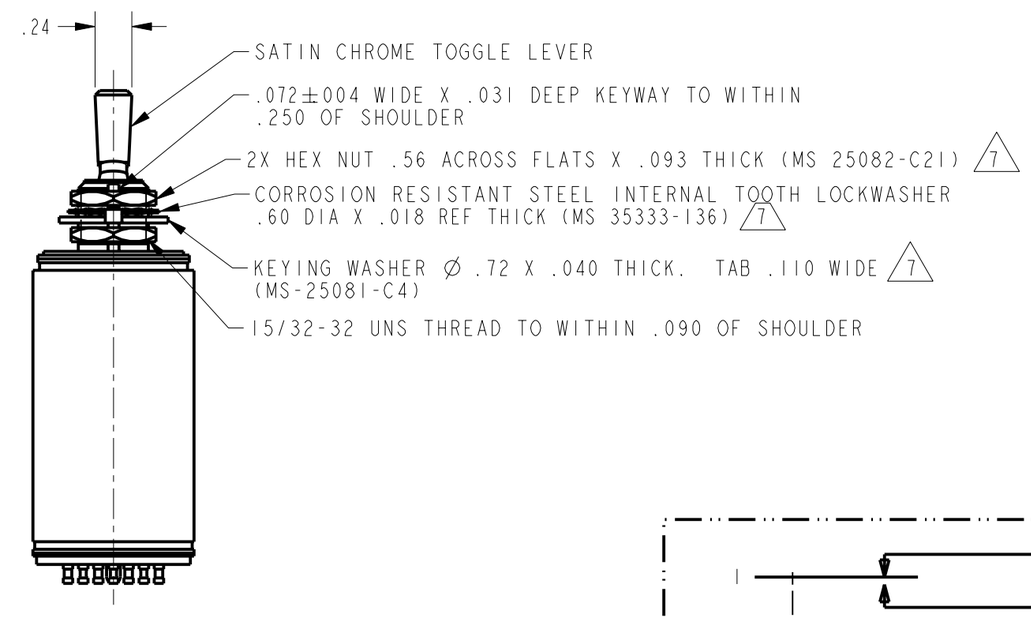

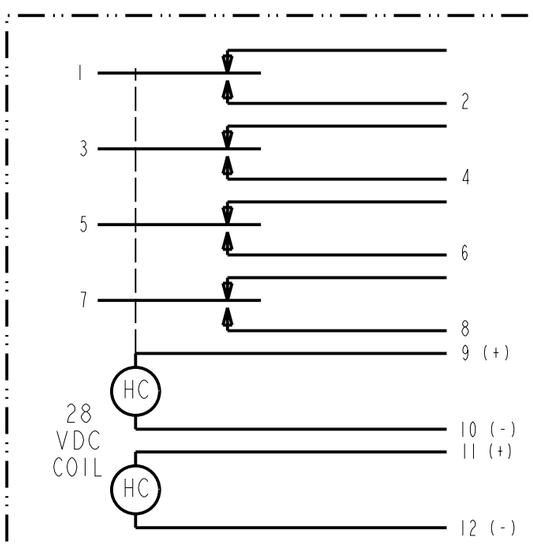

CIRCUIT DIAGRAM
(MECHANICALLY MAINTAINED POSITION)

THIS DRAWING COVERS A PROPRIETARY ITEM AND IS THE PROPERTY OF MICRO SWITCH. A DIVISION OF HONEYWELL. THIS DRAWING IS NOT TO BE COPIED OR USED WITHOUT THE APPROVAL OF MICRO SWITCH

THIRD ANGLE PROJECTION

SCALE FULL

DO NOT SCALE PRINT

UNLESS OTHERWISE SPECIFIED TOLERANCES ARE

ONE PLACE	(.0)	±.030
TWO PLACE	(.00)	±.015
THREE PLACE	(.000)	±.005
ANGLES		±

WEIGHT 6.0 OZ MAX

ANSI Y14.5M-1982 APPLIES

CHARACTERISTICS 3

STEADY STATE LIMITS — — — 20-29 VDC
HOLD IN (SINGLE COIL) — — — — 15 VDC
DROP OUT (SINGLE COIL) — — — 0-15 VDC
OVERRIDE FORCE AT 29 VDC (DUAL COIL) — — 10 LB MAX
OPERATING POSITION — — — — 7 LBS MAX
2X COIL RESISTANCE — — — 460 OHMS MIN
SOLENOID RATING AT 20°C

ELECTRICAL DATA

CONTACT ARRANGEMENT
4X S P S T

VOLTAGE	RATINGS IN AMPERES							
	SEA LEVEL				50,000 FT			
	INRUSH	RES	IND	MOTOR	INRUSH	RES	IND	MOTOR
28 VOLTS DC		7	4			7	2.5	

29ET5-T	CATALOG LISTING	PAGE 1 OF 1	RELEASE NO. PR-18215	REPLACES	ISSUE 6	CHECK	REVISIONS A 202684 G J W 29 MAR 01	CHECK	29 MAR 01	SAV	CHECK	29 MAR 01
PTC/CAD 2D	DRAWN G J W											