MICRO SWITCH
FREEPORT ILLINOIS, U.S.A
A DIVISION OF HONEYWELL
FED. MFG. CODE 91929

SWITCH - BASIC

CATALOG LISTING
2SE321

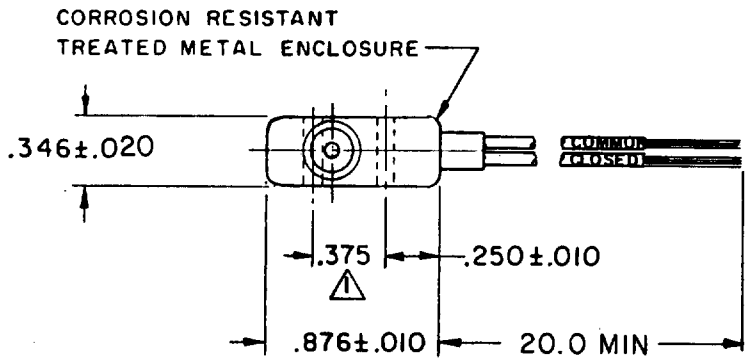

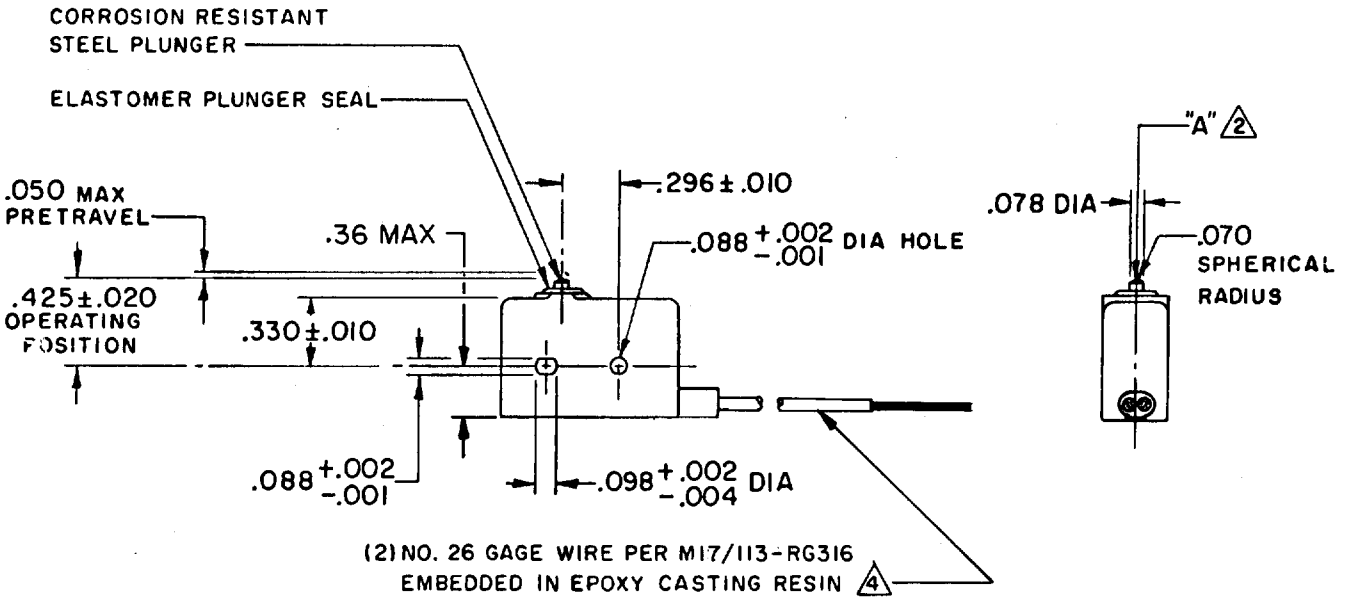

NOTE -

1. MOUNTING HOLES WILL ACCEPT PINS OR SCREWS OF .087 MAX DIA ON .375 ± .002 CENTERS
2. ACTUATION IN LINE WITH ARROW "A" IS RECOMMENDED
3. WEIGHT OF SWITCH ONLY IS .26 OZ. WEIGHT OF SWITCH WITH WIRE LEADS IS .50 OZ MAX
4. WIRE LEADS MARKED WITH CIRCUIT IDENTIFICATION (COMMON AND CLOSED)
5. BASIC SWITCH HAS 24K SOLID GOLD CONTACT MATERIAL

THIS DRAWING COVERS A PROPRIETARY ITEM AND IS THE PROPERTY OF MICRO SWITCH, A DIVISION OF HONEYWELL. THIS DRAWING IS NOT TO BE COPIED OR USED WITHOUT THE APPROVAL OF MICRO SWITCH.

THIRD ANGLE PROJECTION

CHARACTERISTICS

OPERATING FORCE - - - - - 5-17 OZ

RELEASE FORCE - - - - - - - - 4 OZ MIN

RELEASE TRAVEL - - - - - - - .004 MIN

DIFFERENTIAL TRAVEL - - - - .004 MAX

OVERTRAVEL - - - - - - - - - .003 MIN

ELECTRICAL DATA

CONTACT ARRANGEMENT
S P N C

10 VDC - - - - - - - - - - - - - - 0.5 MA

30 VOLTS DC RATING

INDUCTIVE - - - - SEA LEVEL - - 1/2 AMP
50,000 FT - - - 1/2 AMP

RESISTIVE - - - - SEA LEVEL - - 1 AMP
50,000 FT - - - 1 AMP

MAXIMUM INRUSH - - - - - - - - - 2 AMP

SCALE FULL

DO NOT SCALE PRINT

TOLERANCES
APPLY TO DESIGN UNITS. CONVERSIONS ARE ONLY FOR REFERENCE. UNLESS NOTED, TOLERANCES ARE ±

	DIM. mm	TOL. mm/in	DIM in	TOL. mm/in
NO PLACES	X	1/.04		
ONE PLACE	X.X	0.4/.016	X.X	0.8/.03
TWO PLACES	X.XX	0.15/.006	X.XX	0.38/.01
THREE PLACES			X.XXX	0.13/.005
ANGLES				

DESIGN UNITS: SI METRIC ☐ US CUSTOMARY ☒

WEIGHT 3

DRAWN	S J B	10 MAY 79	CHECK
			CHECK
			CHECK
			CHECK
			CHECK

A	PR-7801	S J B 11 MAY 79
B	C057041A	CJH 21 MAR 85
C	C061148	TSK 13 FEB 87

REVISIONS

REPLACES PR-7801

RELEASE NO. 2SE321

DRAWING NUMBER M

ISSUE 5

FO-52848-A