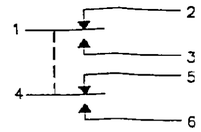

CIRCUIT DIAGRAM

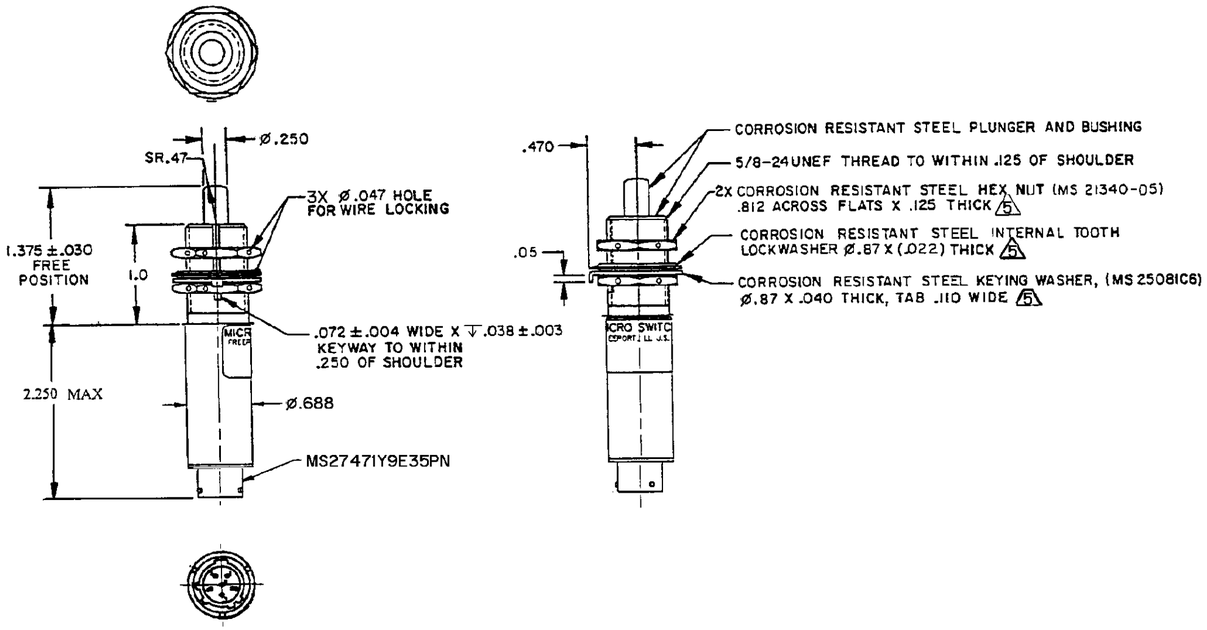

M 402EN122-RB

SPECIFICATION DETAILS:	
STANDARD:	CONFORMS TO MS21321-1 (MIL-PRF-8805/39), EXCEPT AS NOTED
CONSTRUCTION:	
ENCLOSURE DESIGN	RESILIENT SEAL PER MIL-PRF-8805, SYMBOL 4
CONTACT MATERIAL & CONFIGURATION	SMOOTH GOLD CONTACTS
CIRCUIT CONFIGURATION	2 SPDT
TERMINATION	CONNECTOR PER MS27471Y9E35PN
WEIGHT	.20 LB MAX
EXPOSED METALS	CORROSION RESISTANT STAINLESS STEEL
O-RING MATERIAL	**FLUOROSILICONE ELASTOMER**
ELECTRICAL CHARACTERISTICS:	
ELECTRICAL RATINGS	VOLTAGE / RESISTIVE / LOAD INDUCTIVE
-SEA LEVEL	28 VDC / 1 / .5
-50,000 FEET	28 VDC / 1 / .5
DIELECTRIC STRENGTH & INSULATION RESISTANCE	DIELECTRIC STRENGTH (≅60 Hz. FOR 5 SECONDS) / INSULATION RESISTANCE (500 VDC ± 10%)
-BETWEEN TERMINALS AND EXPOSED NON-CURRENT CARRYING METAL	1000 V Rms, 500μ A (MAX. LEAKAGE) / 1000 Megohms MIN
-BETWEEN TEMRINALS OF MUTUALLY INSULATED CIRCUITS	1000 V Rms, 500μ A (MAX. LEAKAGE) / 1000 Megohms MIN
-BETWEEN ALL UNCONNECTED TERMINALS OF THE SAME POLE	1000 V Rms, 500μ A (MAX. LEAKAGE) / 1000 Megohms MIN
SWITCH RESISTANCE	2
RECOMMENDATION OR USE IN APPLICATIONS LESS THAN .5 amps AND/OR 12 volts	YES 6
MECHANICAL CHARACTERISTICS:	
CHARACTERISTICS.	
OPERATING FORCE	6-12 LBS
FULL OVERTRAVEL FORCE	30 LB MAX
RELEASE FORCE	4 LB MIN
PRETRAVEL	.040 MAX
DIFFERENTIAL TRAVEL	.020 MAX
OVERTRAVEL	.250 MIN
COINDICENCE OF OPERATING & RELEASE POINTS	.010 OF PLUNGER TRAVEL
MOUNTING STRENGTH	15 IN-LBS
ACTUATOR STRENGTH	30 LBS APPLIED IN A DIRECTION TO CAUSE SWITCH ACTUATION
LIFE:	
MECHANICAL LIFE	25,000 MIN PER MIL-PRF-8805/40 3
ELECTRICAL LIFE AT FULL RATED LOAD	25,000 MIN PER MIL-PRF-8805/40 3
ENVIRONMENTAL:	
TEMPERATURE RANGE	-55 C TO +85 C
ALTITUDE RANGE	SEA LEVEL TO 50,000 FEET
SHOCK	PER MIL-PRF-8805 SYMBOL M - 100 g
VIBRATION	PER MIL-PRF-8805 SYMBOL 1 - 10-500 Hz & 10 g peak
MOISTURE RESISTANCE	PER MIL-PRF-8805 **(10 DAY TEST)**
THERMAL SHOCK	PER MIL-PRF-8805 **(5 CYCLE TEST)**
SALT SPRAY	PER MIL-PRF-8805 **(96 HOUR TEST)**

NOTES

1. REPLACEMENT MOUNTING HARDWARE - PACKET 19PA8
2. SWITCH RESISTANCE = SWITCH CONTACT RESISTANCE AND INTERCONNECT LEADS AND CONNECTOR PINS SWITCH CONTACT RESISTANCE SHALL NOT EXCEED .025 Ω INITIALLY AND .040 Ω AFTER MECHANICAL ENDURANCE TEST. AFTER ELECTRICAL ENDURANCE, THE SWITCH CONTACT RESISTANCE SHALL NOT EXCEED 1% OF THE LOAD IMPEDANCE USING THE ELECTRICAL PARAMETERS OF THE ELECTRICAL ENDURANCE LOAD LEAD-WIRE AND CONNECTOR RESISTANCE = 050 Ω MAX
3. LIFE RATINGS ARE PER MIL-PRF-8805 REQUIREMENTS ACTUAL LIFE EXCEEDS RATED LIFE. CONTACT HONEYWELL-MICRO SWITCH FOR ADDITIOINAL DATA
4. CIRCUIT DIAGRAM, CATALOG LISTING, **FED MFG CODE** AND DATE CODE ARE SHOWN ON NAMEPLATE
5. HARDWARE MAY BE PACHAGED UNASSEMBLED PER MIL-PRF-8805
6. CONTACT HONEYWELL-MICRO SWITCH IF ADDITIONAL INFORMATION ON LOW ENERGY LOADS IS REQUIRED OR FOR HELP WITH SPECIFIC APPLICATION

THIRD ANGLE PROJECTION

SCALE **NONE**

DO NOT SCALE PRINT

UNLESS OTHERWISE SPECIFIED TOLERANCES ARE

ONE PLACE	(.0)	±.030
TWO PLACES	(.00)	±.015
THREE PLACES	(.000)	±.005
ANGLES		±

WEIGHT

THIS DRAWING COVERS A PROPRIETARY ITEM AND IS THE PROPERTY OF MICRO SWITCH, A DIVISION OF HONEYWELL. THIS DRAWING IS NOT TO BE COPIED OR USED WITHOUT THE APPROVAL OF MICRO SWITCH.

MICRO SWITCH a Honeywell Division

FED. MFG. CODE 91929

SWITCH-ENCLOSED

CATALOG LISTING

402EN122-RB

ANSI Y14.5M-1982 APPLIES

MASTER REDUCED

DRAWING NUMBER 402EN122-RB

PAGE 1 OF 1

ISSUE 4 M

RELEASE NO. PR-23746

REPLACES

REVISIONS

A	PR-REL PR-23746	JJA 18 NOV 98
B	C094194	DLT 4 MAR 99

DRAWN	PPF	12 OCT 98
CHECK	JAF	19 NOV 98
CHECK		
CHECK		

FORMTEK