FO-55111-A

HONEYWELL PART NUMBER
4602EN1-6
9 FAA-PMA

REV	DOCUMENT	CHANGED BY	CHECK
9	0016535	KSR 25OCT05	RJ

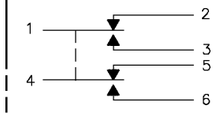

CIRCUIT DIAGRAM

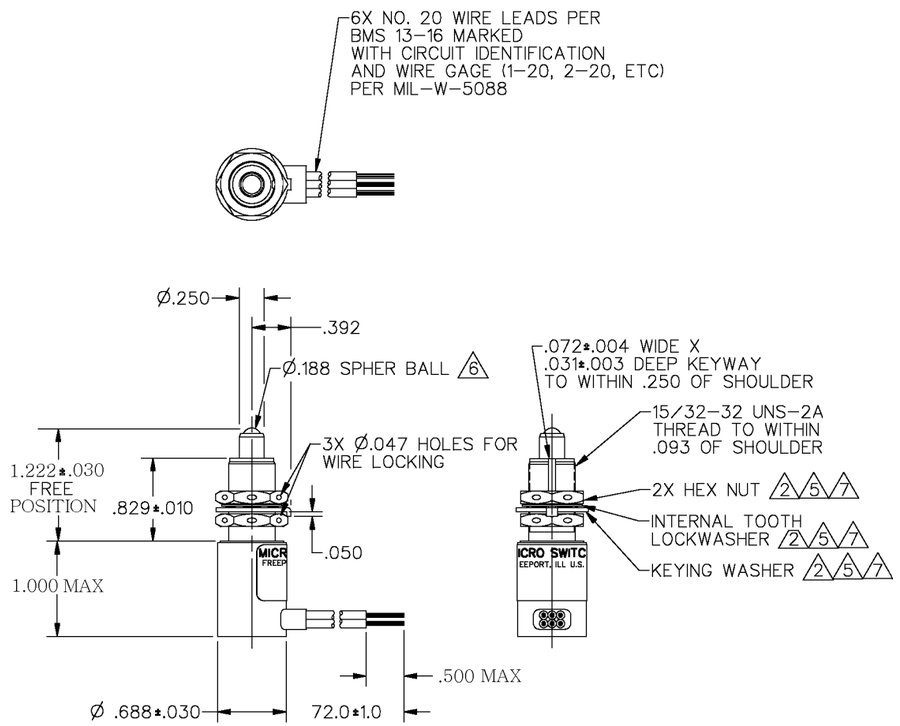

SPECIFICATION DETAILS:

STANDARD:	CONFORMS TO MS27240-3 (MIL-PRF-8805/43), EXCEPT AS NOTED
CONSTRUCTION:	
ENCLOSURE DESIGN	RESILIENT SEAL PER MIL-PRF-8805, SYMBOL 4
CONTACT MATERIAL & CONFIGURATION	SMOOTH GOLD ALLOY CONTACTS
CIRCUIT CONFIGURATION	2 SPDT
TERMINATION	LEADWIRE PER BMS13-16
WEIGHT	4.0 OZS MAX
EXPOSED METALS	CORROSION RESISTANT STAINLESS STEEL 5
ELECTRICAL CHARACTERISTICS:	
ELECTRICAL RATINGS	VOLTAGE / RESISTIVE / LOAD INDUCTIVE
-SEA LEVEL	28VDC 1A .5A
-50,000 FEET	28VDC 1A .5A
DIELECTRIC STRENGTH & INSULATION RESISTANCE	DIELECTRIC STRENGTH (≈60 Hz, FOR 5 SECONDS) / INSULATION RESISTANCE (500 VDC ±10%)
-BETWEEN TERMINALS AND EXPOSED NON-CURRENT CARRYING METAL	1000 V Rms, 500μA (MAX LEAKAGE) / 1000 Megohm MIN
-BETWEEN TERMINALS OF MUTUALLY INSULATED CIRCUITS	1000 V Rms, 500μA (MAX LEAKAGE) / 1000 Megohm MIN
-BETWEEN ALL UNCONNECTED TERMINALS OF THE SAME POLE	1000 V Rms, 500μA (MAX LEAKAGE) / 1000 Megohm MIN
SWITCH RESISTANCE	6 VDC/.100 A; 200 MILLIOHMS MAX
RECOMMENDATION OR USE IN APPLICATIONS LESS THAN .5 AMPS AND/OR 12 VOLTS	13 VDC, .003 A 8 3
MECHANICAL CHARACTERISTICS:	
CHARACTERISTICS:	
COINCIDENCE OF OPERATING AND RELEASING POINTS	.010 OF PLUNGER TRAVEL
OPERATING FORCE	3-6 LBS
FULL OVERTRAVEL FORCE	17 LB MAX
RELEASE FORCE	2 LB MIN
PRETRAVEL	.040 MAX
DIFFERENTIAL TRAVEL	.020 MAX
OVERTRAVEL	.125 MIN
MOUNTING STRENGTH	15 IN-LBS
ACTUATOR STRENGTH	30 LBS APPLIED IN A DIRECTION TO CAUSE SWITCH ACTUATION
LIFE:	
MECHANICAL LIFE	25,000 MIN PER MIL-PRF-8805/43 4
ELECTRICAL LIFE AT FULL RATED LOAD	25,000 MIN PER MIL-PRF-8805/43 4
ENVIRONMENTAL:	
TEMPERATURE RANGE	-55°C TO +85°C
ALTITUDE RANGE	SEA LEVEL TO 50,000 FEET
SHOCK	PER MIL-PRF-8805 SYMBOL M - 100 g
VIBRATION, RANDOM	PER GTR D200Z001, ZONE 4, CAT A @ 13.5 GMRS
MOISTURE RESISTANCE	PER MIL-PRF-8805 (10 DAY TEST)
THERMAL SHOCK	PER MIL-PRF-8805 (5 CYCLE TEST)
SALT SPRAY	PER MIL-PRF-8805 (96 HOUR TEST)
SAND AND DUST	PER MIL-PRF-8805, METHOD I
TERMINAL STRENGTH	15 LBS

NOTES
1 - CIRCUIT DIAGRAM AND CATALOG LISTING SHOWN ON NAMEPLATE
2 HARDWARE MAY BE PACKAGED UNASSEMBLED PER MIL-PRF-8805. NUT: .62 ACROSS FLATS X .125 THICK (MS 21340-24), INTERNAL TOOTH: Ø.60 X (.018) KEYWASHER Ø.72 X .040 THICK, TAB .110 WIDE
3 CONTACT HONEYWELL-MICRO SWITCH IF ADDITIONAL INFORMATION ON LOW ENERGY LOADS IS REQUIRED OR FOR HELP WITH SPECIFIC APPLICATIONS
4 LIFE RATINGS ARE PER MIL-PRF-8805 REQUIREMENTS. ACTUAL LIFE EXCEEDS RATED LIFE. CONTACT HONEYWELL-MICRO SWITCH FOR ADDITIONAL DATA
5 HARDWARE IS CADMIUM PLATED
6 ROLLER BALL BEARING PLUNGER FOR USE WITH 20° MAX RISE ON CAM OR SLIDE ACTUATION
7 REPLACEMENT HARDWARE - PACKET 19PA210-EN
8

LIFE RATINGS BEYOND MIL-PRF-8805 REQUIREMENTS PER MICRO SWITCH TEST PLAN	
LOGIC LEVEL CIRCUIT	50,000

9 FOR MANUFACTURING DETAILS SEE ASSEMBLY DRAWING 4602EN1-6 FOR FAA-PMA

DESIGN UNITS: INCH
TOLERANCES UNLESS NOTED:

NO PLACE	X	±	
ONE PLACE	.X	±	0.030
TWO PLACE	.XX	±	0.015
THREE PLACE	.XXX	±	0.005
FOUR PLACE	.XXXX	±	
ANGLES		±	

THIRD ANGLE PROJECTION

DRAWN	TSM	07NOV96
CHECK	MAM	07NOV96

THIS DRAWING COVERS A PROPRIETARY ITEM AND IS THE PROPERTY OF HONEYWELL. THIS DRAWING IS NOT TO BE COPIED OR USED WITHOUT THE PERMISSION OF HONEYWELL.

INTERPRET PER ASME Y14.5M-1994 OTHER HONEYWELL ENGINEERING STANDARDS MAY APPLY

RASTER

Honeywell

TITLE
SWITCH - ENCLOSED

SIZE	TYPE	DRAWING NAME	REV
B	I	4602EN1-6	9

SCALE 1:1 SHEET 1 OF 1