4602EN222-R

CIRCUIT DIAGRAM
(CONNECTOR PIN OUT)

CONN. PIN #	SWITCH LD #
1	1
2	2
3	(PLUGGED)

SPECIFICATION DETAILS:

STANDARD:	CONFORMS TO MS27240-3 (MIL-PRF-8805/43), EXCEPT AS NOTED
CONSTRUCTION:	
ENCLOSURE DESIGN	RESILIENT SEAL PER MIL-PRF-8805, SYMBOL 4
CONTACT MATERIAL & CONFIGURATION	SMOOTH GOLD ALLOY CONTACTS
CIRCUIT CONFIGURATION	1 SPNC
TERMINATION	BACC45FT12A3P6
WEIGHT	4.0 OZS MAX
EXPOSED METALS	CORROSION RESISTANT STAINLESS STEEL 5
ELECTRICAL CHARACTERISTICS:	
ELECTRICAL RATINGS	VOLTAGE / LOAD RESISTIVE / LOAD INDUCTIVE
-SEA LEVEL	28VDC 1A .5A
-50,000 FEET	28VDC 1A .5A
DIELECTRIC STRENGTH & INSULATION RESISTANCE	DIELECTRIC STRENGTH (≈ 60 Hz, FOR 5 SECONDS) / INSULATION RESISTANCE (500 VDC ±10%)
-BETWEEN TERMINALS AND EXPOSED NON-CURRENT CARRYING METAL	1000 V Rms, 500 μA (MAX LEAKAGE) / 1000 Megohm MIN
-BETWEEN TERMINALS OF MUTUALLY INSULATED CIRCUITS	1000 V Rms, 500 μA (MAX LEAKAGE) / 1000 Megohm MIN
-BETWEEN ALL UNCONNECTED TERMINALS OF THE SAME POLE	1000 V Rms, 500 μA (MAX LEAKAGE) / 1000 Megohm MIN
SWITCH RESISTANCE	6 VDC/.100 A; 200 MILLIOHMS MAX
RECOMMENDATION OR USE IN APPLICATIONS LESS THAN .5 AMPS AND/OR 12 VOLTS	13 VDC, .003 A 8 3
MECHANICAL CHARACTERISTICS:	
CHARACTERISTICS:	
OPERATING FORCE	3-6 LBS
FULL OVERTRAVEL FORCE	17 LB MAX
RELEASE FORCE	2 LB MIN
PRETRAVEL	.040 MAX
DIFFERENTIAL TRAVEL	.020 MAX
OVERTRAVEL	.125 MIN
MOUNTING STRENGTH	15 IN-LBS
ACTUATOR STRENGTH	30 LBS APPLIED IN A DIRECTION TO CAUSE SWITCH ACTUATION
LIFE:	
MECHANICAL LIFE	25,000 MIN PER MIL-PRF-8805/43 4
ELECTRICAL LIFE AT FULL RATED LOAD	25,000 MIN PER MIL-PRF-8805/43 4
ENVIRONMENTAL:	
TEMPERATURE RANGE	-55° C TO +85° C
ALTITUDE RANGE	SEA LEVEL TO 50,000 FEET
SHOCK	PER MIL-PRF-8805 SYMBOL M - 100 g
VIBRATION, RANDOM	PER GTR D200Z001, ZONE 4, CAT A @ 13.5 GMRS
MOISTURE RESISTANCE	PER MIL-PRF-8805 (10 DAY TEST)
THERMAL SHOCK	PER MIL-PRF-8805 (5 CYCLE TEST)
SALT SPRAY	PER MIL-PRF-8805 (96 HOUR TEST)
SAND AND DUST	PER MIL-PRF-8805, METHOD 1
TERMINAL STRENGTH	15 LBS

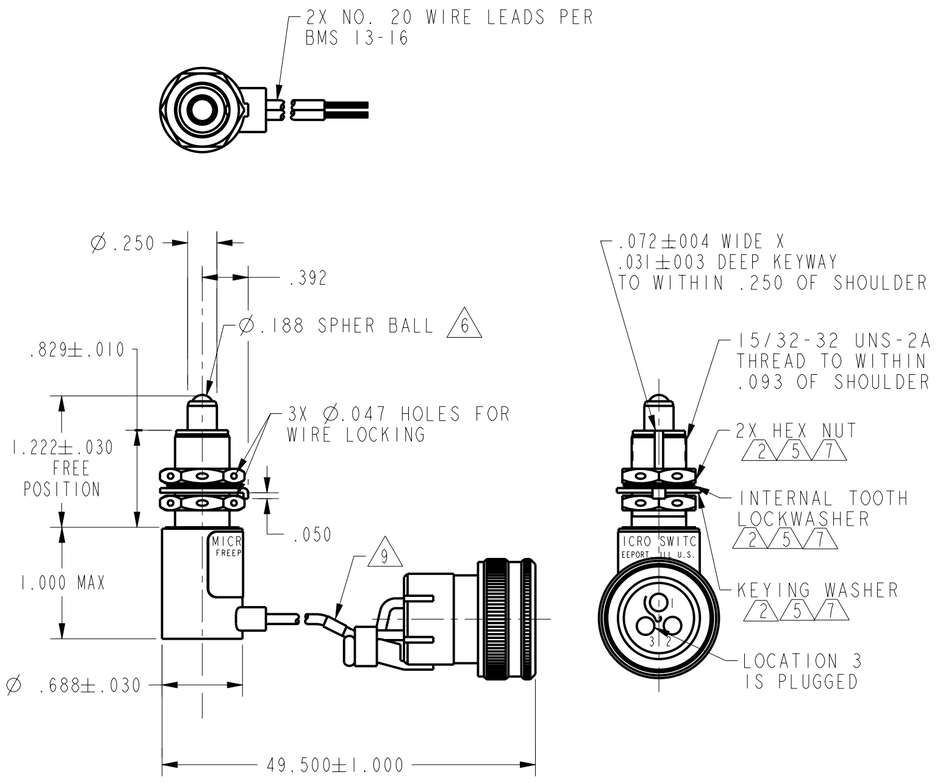

NOTES

1 - CIRCUIT DIAGRAM AND CATALOG LISTING SHOWN ON NAMEPLATE

2 HARDWARE MAY BE PACKAGED UNASSEMBLED PER MIL-PRF-8805. NUT: .62 ACROSS FLATS X .125 THICK (MS 21340-24), INTERNAL TOOTH: Ø.60 X (.018) KEYWASHER Ø.72 X .040 THICK, TAB .110 WIDE

3 CONTACT HONEYWELL-MICRO SWITCH IF ADDITIONAL INFORMATION ON LOW ENERGY LOADS IS REQUIRED OR FOR HELP WITH SPECIFIC APPLICATIONS

4 LIFE RATINGS ARE PER MIL-PRF-8805 REQUIREMENTS. ACTUAL LIFE EXCEEDS RATED LIFE. CONTACT HONEYWELL-MICRO SWITCH FOR ADDITIONAL DATA

5 HARDWARE IS CADMIUM PLATED

6 ROLLER BALL BEARING PLUNGER FOR USE WITH 20° MAX RISE ON CAM OR SLIDE ACTUATION

7 REPLACEMENT HARDWARE - PACKET 19PA210-EN

8

LIFE RATINGS BEYOND MIL-PRF-8805 REQUIREMENTS PER MICRO SWITCH TEST PLAN	
LOGIC LEVEL CIRCUIT	50,000

9 LABEL TO INCLUDE - MATE WITH : D21291J, AC1463, POS 09, STA1463, WL197, LBL25

ANSI Y14.5M-1982 APPLIES

THIS DRAWING COVERS A PROPRIETARY ITEM AND IS THE PROPERTY OF MICRO SWITCH. A DIVISION OF HONEYWELL. THIS DRAWING IS NOT TO BE COPIED OR USED WITHOUT THE APPROVAL OF MICRO SWITCH.

MICRO SWITCH a Honeywell Division
FED. MFG. CODE 91929

SWITCH - ENCLOSED ASSEMBLY

CATALOG LISTING
4602EN222-R

THIRD ANGLE PROJECTION

SCALE FULL

DO NOT SCALE PRINT

UNLESS OTHERWISE SPECIFIED TOLERANCES ARE

ONE PLACE	(.0)	±.030
TWO PLACES	(.00)	±.015
THREE PLACES	(.000)	±.005
ANGLES		±

WEIGHT

4602EN222-R
PAGE 1 OF 1
RELEASE NO. PR-22750
REPLACES -
DRAWING NUMBER 5
ISSUE
CHECK
REVISIONS
A 204384 GJW NOV 01
CHECK
14 NOV 01 SAV
CHECK
14 NOV 01 GJW
DRAWN
PTC/CAD 2D