MICRO SWITCH
a Honeywell Division
FED. MFG. CODE 91929

SWITCH–ENCLOSED

CATALOG LISTING
602HE148–RB

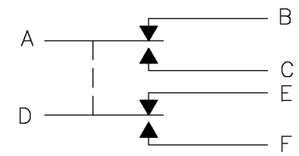

CIRCUIT DIAGRAM

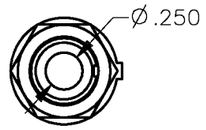

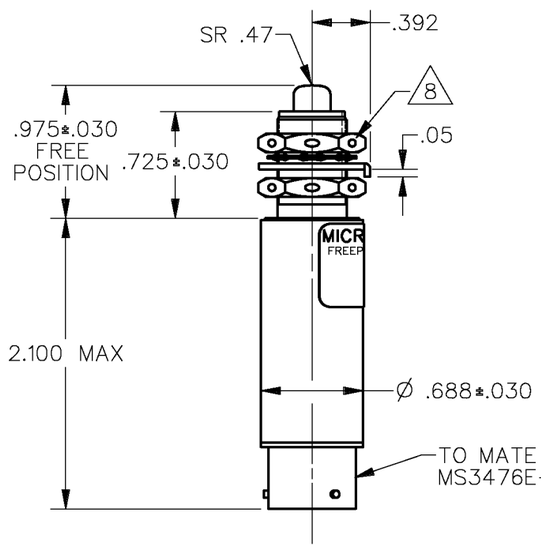

CORROSION RESISTANT STEEL PLUNGER AND BUSHING

.072±.004 WIDE X .031±.003 DEEP KEYWAY
TO WITHIN .250 OF SHOULDER

15/32–32 UNS–2A THREAD TO WITHIN .093 OF SHOULDER

CORROSION RESISANT STEEL INTERNAL TOOTH LOCKWASHER
Ø.60 X (.018) THICK (MS 35333–136) 3

CORROSION RESISTANT STEEL KEYING WASHER, Ø.72
X .040 THICK, TAB .110 WIDE (MS 25081C4) 3

2X CORROSION RESISTANT STEEL HEX NUT, .62 ACROSS
FLATS X .125 THICK (MS 21340–24) 3

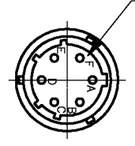

NOTES
1 – CORROSION RESISTANT STEEL ENCLOSURE
2 – SWITCH SEALED PER MIL–PRF–8805 SYMBOL 5
3 HARDWARE MAY BE PACKAGED UNASSEMBLED PER MIL–PRF–8805
4 – CIRCUIT DIAGRAM AND CATALOG LISTING ARE SHOWN ON LABEL
5 – COINCIDENCE OF OPERATING AND RELEASING POINTS: .010 INCH OF PLUNGER TRAVEL
6 – FOR OPERATION IN TEMPERATURE OF –65°F TO +257°F
7 GOLD CONTACTS
8 6X Ø.047 HOLE FOR WIRE LOCKING

THIS DRAWING COVERS A PROPRIETARY ITEM AND IS THE PROPERTY OF MICRO SWITCH. A DIVISION OF HONEYWELL. THIS DRAWING IS NOT TO BE COPIED OR USED WITHOUT THE APPROVAL OF MICRO SWITCH

THIRD ANGLE PROJECTION

SCALE FULL

DO NOT SCALE PRINT

CHARACTERISTICS

OPERATING FORCE	5 –12 LB
FULL OVERTRAVEL FORCE	30 LB MAX
RELEASE FORCE	3 LB MIN
PRETRAVEL	.040 MAX
DIFFERENTIAL TRAVEL	.020 MAX
OVERTRAVEL	.125 MIN

ELECTRICAL DATA

CONTACT ARRANGEMENT
2X S P D T 7

LOAD	28 VDC	
	SEA LEVEL	50,000 FT.
RES	1	1
IND	.5	.5
MOTOR		
LAMP		

UNLESS OTHERWISE SPECIFIED TOLERANCES ARE

ONE PLACE	(.0)	±.030
TWO PLACE	(.00)	±.015
THREE PLACE	(.000)	±.005
ANGLES		±

WEIGHT

ANSI Y14.5M–1982 APPLIES

CATALOG LISTING 602HE148–RB
PAGE 1 OF 1
RELEASE NO. PR–20595
REPLACES
ISSUE 4
M

REVISIONS

A	PR–20595	S A V 14 JUNE 93	20AUG07
B	CO–81044A	S A V 27 JUL 95	
C	0033012	JA 20AUG07	PSR

CHECK
CHECK 21JUNE93
CHECK T S M
CHECK 14JUNE93
DRAWN S A V
DDM/CAD