MICRO SWITCH
a Honeywell Division
FED. MFG. CODE 91929

SWITCH - ENCLOSED

CATALOG LISTING
604HE161
6632303001-001

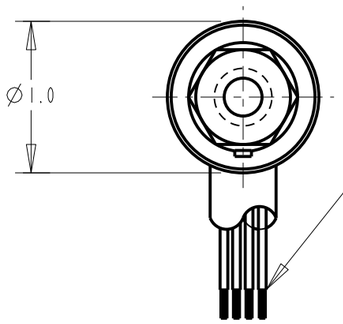

12X NO 22 WIRE LEAD PER MIL-W-22759/11-22 WITH IDENTIFICATION AND WIRE GAGE (1-22, 2-22, ETC) PER MIL-W-5088

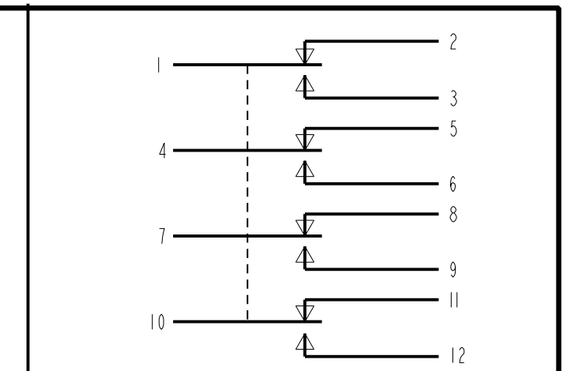

CIRCUIT DIAGRAM

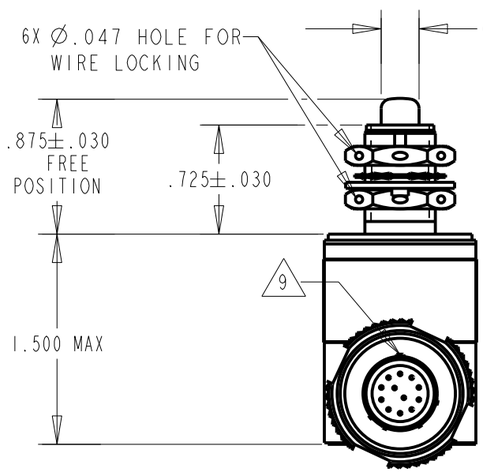

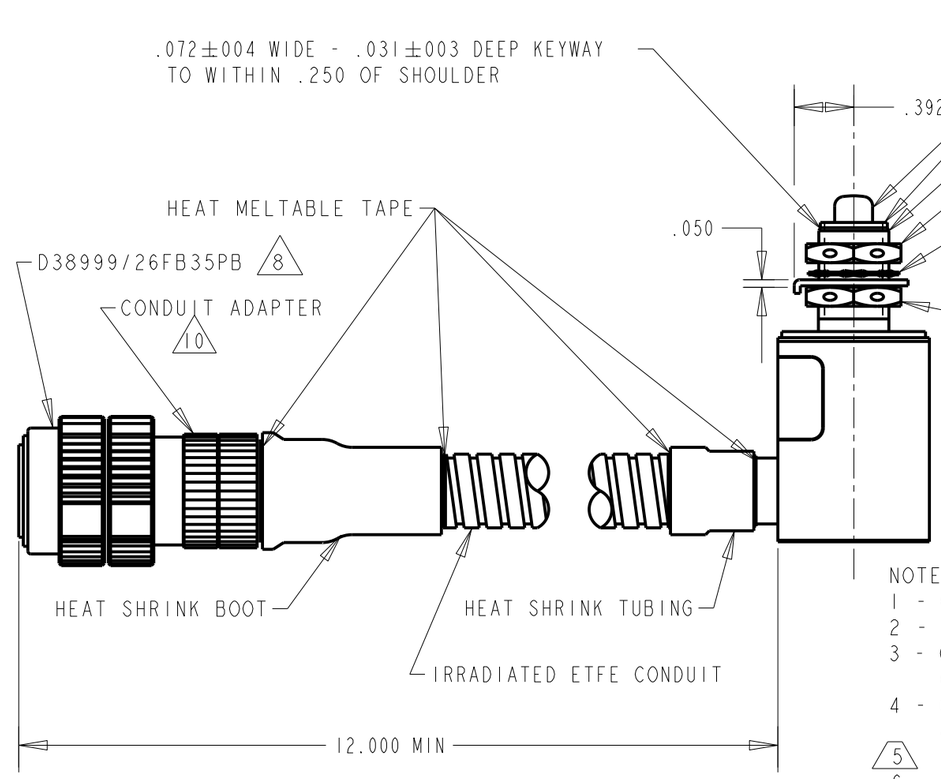

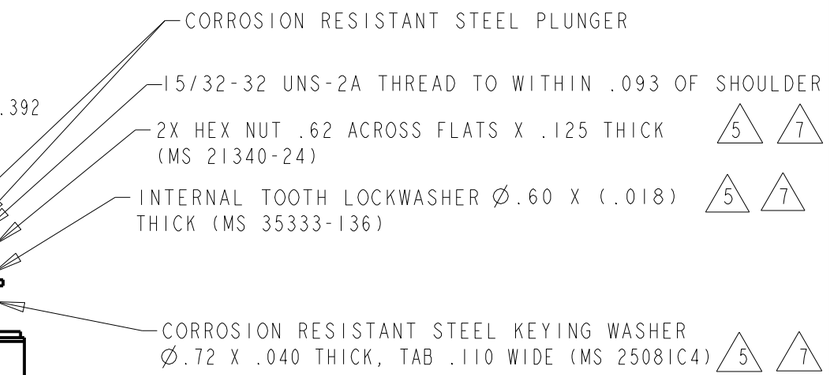

NOTES
1 - CORROSION RESISTANT STEEL ENCLOSURE
2 - SWITCH SEALED PER MIL-PRF-8805 SYMBOL 5
3 - COINCIDENCE OF OPERATING AND RELEASE POINTS: .010 INCH OF PLUNGER TRAVEL
4 - CIRCUIT DIAGRAM, CATALOG LISTING, DATE CODES, FED. MFG. CODES AND CUST. P/N ARE SHOWN ON NAMEPLATE
5 REPLACEMENT MOUNTING HARDWARE - PACKET 19PA9
6 - OPERATION IN TEMPERATURE RANGE OF -65°F TO +257 °F
7 HARDWARE MAY BE PACKAGED UNASSEMBLED PER MIL-PRF-8805
8 PER MIL-C-38999 THE LETTER(S) 'J' OR 'JAN' MAY PRECEDE THE PART NUMBER
9 KEYWAY LOCATION SHOWN FOR REFERENCE: MAY BE RECEIVED ROTATED ABOUT ANY POSITION OF CONNECTOR DIAMETER.
10 CONDUIT ADAPTER MAY BE LOOSENED FROM CONNECTOR BODY TO ALLOW PROPER MATING OF PLUG TO RECEPTCLE. AFTER MATING OF PLUG TO RECEPTACLE, CONDUIT ADAPTOR SHOULD BE TORQUED 40-50 IN-LBS

THIS DRAWING COVERS A PROPRIETARY ITEM AND IS THE PROPERTY OF MICRO SWITCH. A DIVISION OF HONEYWELL. THIS DRAWING IS NOT TO BE COPIED OR USED WITHOUT THE APPROVAL OF MICRO SWITCH

THIRD ANGLE PROJECTION

SCALE FULL

DO NOT SCALE PRINT

UNLESS OTHERWISE SPECIFIED TOLERANCES ARE

ONE PLACE	(.0)	±.030
TWO PLACE	(.00)	±.015
THREE PLACE	(.000)	±.005
ANGLES		±

WEIGHT 6 OZ MAX

ANSI Y14.5M-1982 APPLIES

CHARACTERISTICS	
OPERATING FORCE	5-12 LB
DIFFERENTIAL FORCE	30 LB MAX
RELEASE FORCE	3 LB MIN
PRETRAVEL	.040 MAX
DIFFERENTIAL TRAVEL	.020 MAX
OVERTRAVEL	.125 MIN

ELECTRICAL DATA

CONTACT ARRANGEMENT
4X S P D T

LOAD	28 VDC SEA LEVEL & 100,000 FT
RES	7
IND	4
MOTOR	4

CATALOG LISTING 604HE161
PAGE 1 OF 1
RELEASE NO.
REPLACES
ISSUE 6
CHECK
REVISIONS
E 0008658 KSR 13OCT04
CHECK
13OCT04
AK
CHECK
13OCT04
2D
DRAWN
KSR
PTC/CAD