MICRO SWITCH
a Honeywell Division
FED. MFG. CODE 91929

SWITCH - ENCLOSED

CATALOG LISTING
604HE162

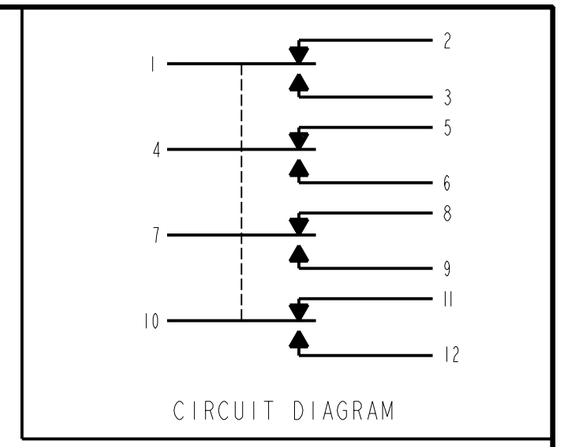

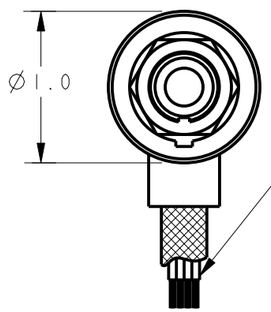

12X NO 22 WIRE LEAD PER MIL-W-22759/11-22-9 WITH IDENTIFICATION AND WIRE GAGE (1-22, 2-22, ETC) PER MIL-W-5088

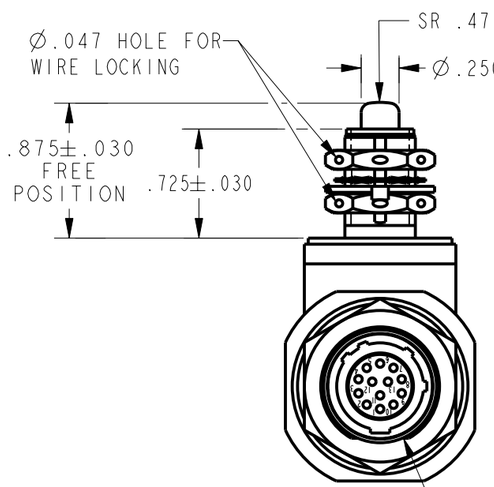

CONNECTOR FLAT TO BE ORIENTED DOWN, (180°) FROM PLUNGER

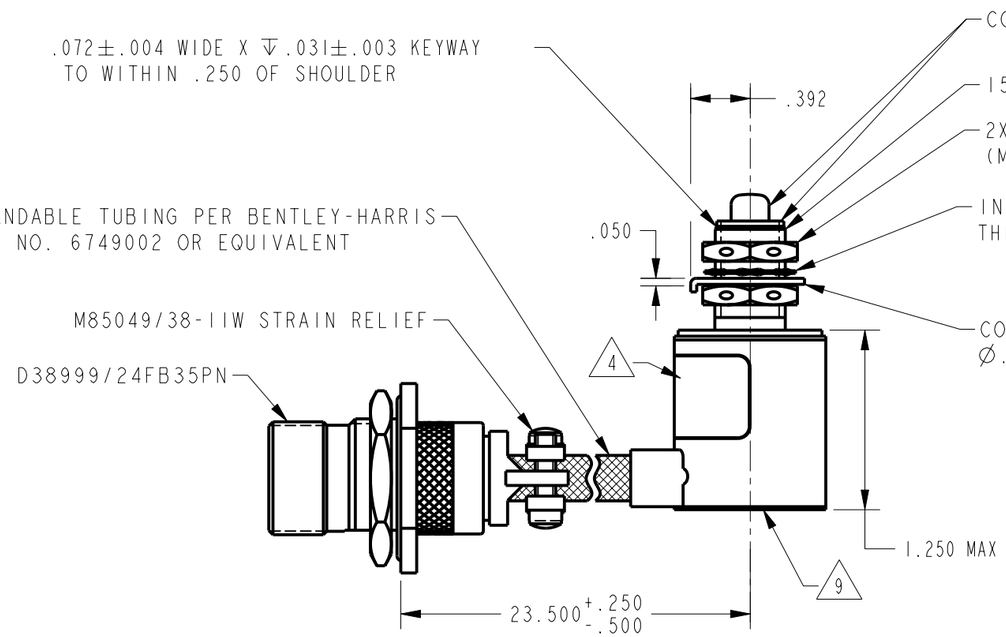

CORROSION RESISTANT STEEL PLUNGER AND BUSHING

15/32-32 UNS-2A THREAD TO WITHIN .093 OF SHOULDER

2X HEX NUT .62 ACROSS FLATS X .125 THICK (MS 21340-04) 5 7

INTERNAL TOOTH LOCKWASHER Ø60 X (.018) THICK (MS 35333-136) 5 7

CORROSION RESISTANT STEEL KEYING WASHER Ø.72 X .040 THICK, TAB .110 WIDE (MS 25081C4) 5 7

NOTES
1 - CORROSION RESISTANT STEEL ENCLOSURE
2 - SWITCH SEALED PER MIL-PRF-8805 SYMBOL 5
3 - COINCIDENCE OF OPERATING AND RELEASE POINTS: .010 INCH OF PLUNGER TRAVEL
4 CIRCUIT DIAGRAM, CATALOG LISTING, FSCM CODE, TITLE "SWITCH SIDE BRACE ACTUATOR-MAIN LDG", "SCD NO. 7632608501-001" AND "SN XXXX" TO BE SHOWN ON LABEL
5 REPLACEMENT MOUNTING HARDWARE - PACKET 19PA9
6 - OPERATION IN TEMPERATURE RANGE OF -65°F TO +257°F
7 HARDWARE MAY BE PACKAGED UNASSEMBLED PER MIL-PRF-8805
8 GOLD BIFURCATED CONTACTS
9 DATE CODE LABEL PLACED ON BOTTOM PLATE

THIS DRAWING COVERS A PROPRIETARY ITEM AND IS THE PROPERTY OF MICRO SWITCH, A DIVISION OF HONEYWELL. THIS DRAWING IS NOT TO BE COPIED OR USED WITHOUT THE APPROVAL OF MICRO SWITCH

THIRD ANGLE PROJECTION

SCALE FULL

DO NOT SCALE PRINT

UNLESS OTHERWISE SPECIFIED TOLERANCES ARE

ONE PLACE	(.0)	±.030
TWO PLACE	(.00)	±.015
THREE PLACE	(.000)	±.005
ANGLES		±

WEIGHT 8 OZ MAX

CHARACTERISTICS

OPERATING FORCE	5-12 LB
DIFFERENTIAL FORCE	30 LB MAX
RELEASE FORCE	3 LB MIN
PRETRAVEL	.040 MAX
DIFFERENTIAL TRAVEL	.020 MAX
OVERTRAVEL	.125 MIN
FREE POSITION	

ELECTRICAL DATA

CONTACT ARRANGEMENT 8
4X S P D T

LOAD	28 VDC SEA LEVEL & 100,000 FT
RES	1
IND	.5
LAMP	.12 @ 5 VDC

ANSI Y14.5M-1982 APPLIES

604HE162 | CATALOG LISTING | PAGE 1 OF 1 | RELEASE NO. PR-21234 | REPLACES | ISSUE 4 | CHECK | REVISIONS A CO-95711 S A V 6 DEC 99 | CHECK | 6 DEC 99 | JAF | CHECK | 6 DEC 99 | 2D | PTC/CAD | DRAWN | S A V