THIS COPY IS PROVIDED ON A RESTRICTED BASIS AND IS NOT TO BE USED IN ANY WAY DETRIMENTAL TO THE INTERESTS OF PANDUIT CORP.

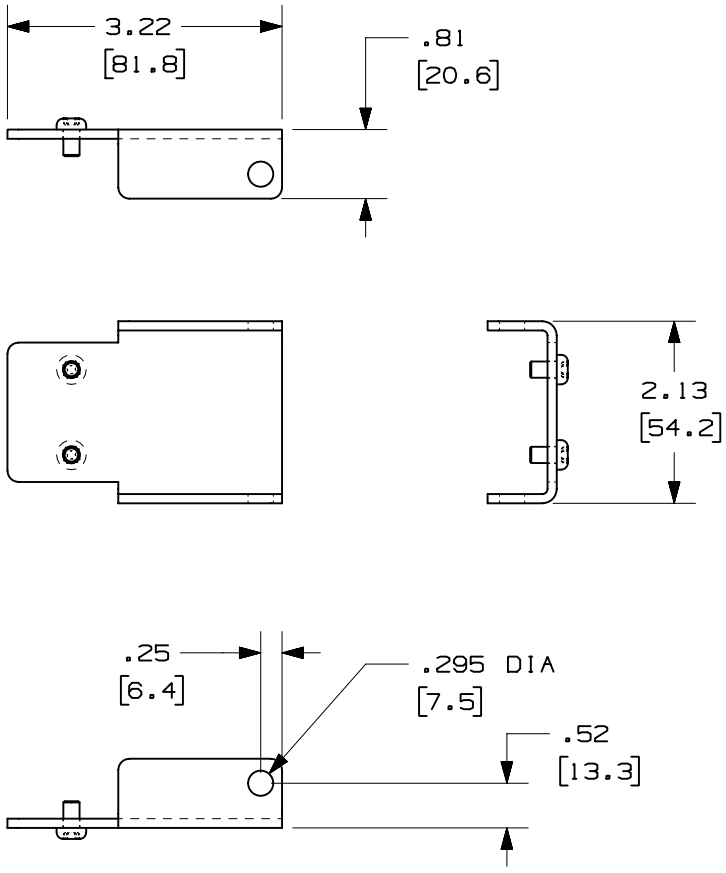

PANDUIT P/N	WEIGHT
NFEDB23	.27 LBS/EACH 122.5 g/EACH

NOTES:
1. VISIT OUR ON-LINE CATALOG AT WWW.PANDUIT.COM FOR A CURRENT LIST OF PRODUCTS APPLICABLE FOR USE WITH THIS PART.
2. DIMENSIONS IN PARENTHESIS ARE METRIC (mm).
3. EXTENDER DOOR BRACKET IS USED WHEN THE NFR84 IS SETUP FOR 23" MOUNTING.
4. COMPONENTS:
   1- BRACKET
   2- #10-32 X 5/16" SCREWS

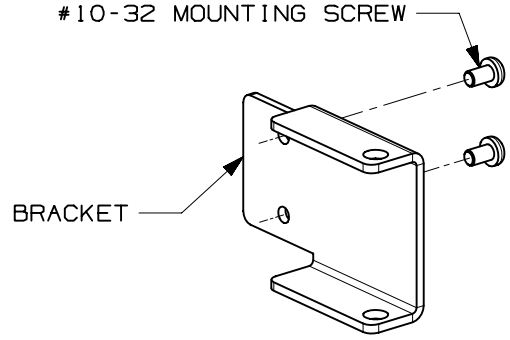

REV	DATE	BY	CHK	DESCRIPTION	ECN - R	CUST	SUP	OTH
R	5-21-03	JDWE		RELEASED TO PRODUCTION	10099-43			

MODEL FILENAME: V10099EF_23_DOOR_EXTBRKT_00.PRT

CAD FILENAME/LAYERS: V10099EF_DC_00A.PRT

PANDUIT CORP. TINLEY PARK, ILLINOIS

23" NETFRAME EXTENDER DOOR BRACKET
(NFEDB23)
CUSTOMER DRAWING

UNLESS OTHERWISE SPECIFIED, DIMENSIONAL TOLERANCES ARE:
(.X) ± --- (.XXX) ± .03
(.XX) ± .06 ANGLES ± 1°

UNLESS OTHERWISE SPECIFIED, ALL DIMENSIONS ARE GIVEN IN INCHES, THIRD ANGLE PROJECTION.

DRAWN BY: JDWE

DATE: 5-21-03

CHK'D:

MAT'L: STEEL- POWDER COATED BLACK

SCALE: NONE

DRAWING NO.: 10099-43

DWG SIZE: A