THIS COPY IS PROVIDED ON A RESTRICTED BASIS AND IS NOT TO BE USED IN ANY WAY DETRIMENTAL TO THE INTERESTS OF PANDUIT CORP.

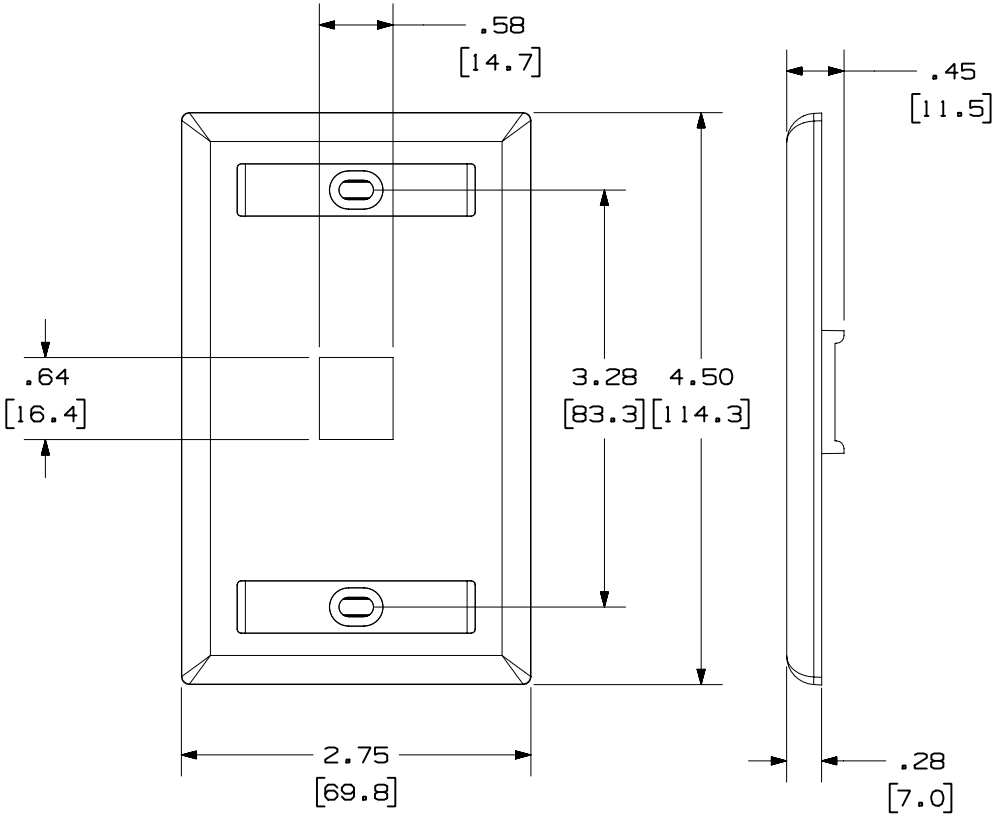

PANDUIT P/N	WEIGHT
NK1F**	.49 LB/10 PCS (222 g/10 PCS)

NOTES:
1. SEE CURRENT CATALOG FOR ADDITIONAL PART SUFFIXES TO INDICATE COLOR AND OR PACKAGE QUANTITY.
2. FACEPLATE WILL ACCEPT ONE STANDARD KEYSTONE MODULE.
3. PART INCLUDES:
   1- FACEPLATE
   2- MOUNTING SCREW
   2- LABEL
   2- LABEL COVER
4. DIMENSIONS IN PARENTHESES ARE IN METRIC.

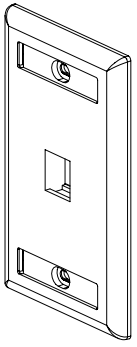

MODEL FILENAME: M00661BB_KEYSTONEFP1_01.PRT
DRAWING FILENAME: D38361BS_DC_00B.PRT
SIZE: A

NETKEY™ 1 POSITION SINGLE GANG FACEPLATE WITH LABEL CONTROL DRAWING

PANDUIT® CORP.
TINLEY PARK, IL 60477

THIRD ANGLE PROJECTION

ALL DIMENSIONS ARE GIVEN IN INCHES, UNLESS OTHERWISE SPECIFIED.
DIMENSIONAL TOLERANCES ARE:
(.X) ±.03 (.XXX) ±.005
(.XX) ±.01 ANGLES ± 1°

DRAWN BY: JHNU
DATE: 12-3-01
CHK'D: HIW
MATERIAL: ABS

I.I. NUMBER: N/A
PRODUCT SPEC: N/A
WORK INSTRUCTION: N/A
SCALE: NONE
PART NO.: NK1F**
DRAWING NO.: 38361-19

REV	DATE	BY	CHK	DESCRIPTION	ECN - R	CUST	SUP	OTH
1	10-21-02	JsP		A. REVISED TITLE.	38361-19			
R	12-3-01	JHNU	HIW	RELEASED TO PRODUCTION	38361-19			